NESBIT & ASSOCIATES, L.L.C.
CONSULTING ENGINEERING
11853 Market Place Avenue
Baton Rouge, Louisiana 70816
Phone (225) 291-9266 Fax (225) 291-9268

Murphy Nesbit, Electrical & Lighting Designer

50% Construction Document
Lighting Fixture Package Proposal

Date:

10/24/17

Project Name:

AGC Office Renovation

Comments:

Please review the attached cutsheets that correspond with the fixture types shown on the 50% CD drawings, and send any comments, desired changes, questions, etc as soon as you are able in order for us to make necessary changes to the project lighting design.

The following fixture options are to be selected by the architect:

- Finish of types E, G1, G2, H, J, L,Q, N, U, V, & X.
- Location of remote driver/transformer for types J & U.

Unless instructed otherwise, we will instruct the contractor to verify such options in advance with the architect.

However, if it is the architect's desire for these option selections to be include in the construction documents in order to expedite the prior approval process, shop drawing review, and construction phase, please provide to us the above desired selections.

Thank you.

OLPL14 Series
1′ x 4′ LED Edge-Lit Panel

Project:
Fixture Type:
Catalog Number:
Notes:

* 36W only

Easily upgrade the look of any ceiling with the Ohyama Lights 1′ x 4′ Edge-Lit LED Panel. With a flat profile and clean design aesthetic the OLPL14 presents a smooth continuous look that is perfect for hallways, classrooms, offices and bathrooms. Our Edge-Lit panel provides comfortable glare-free uniform illumination while eliminating the expense associated with labor for relamping and hazardous material disposal that traditional fluorescent luminaires require.

Performance Overview
Watts: 36 / 43 / 52
CCT: 3500K / 4000K / 5000K
Lumens: 3250 - 4750
Beam Angle: 112°
CRI: > 80
Dimming: PWM, 0-10V, DALI
Input Rating - AC: 100~277V; 50/60Hz
Output Rating - DC: 24~28V; 1.4A
Max. Operating Temp: 50°C
Min. Operating Temp: -20°C
PFC: >0.92
CSA Listed; Suitable For Dry Locations
L70: 68,000 Hours
Warranty: 5 Years
Construction
White Aluminum Frame
Diffuser + Light Guide + Reflector

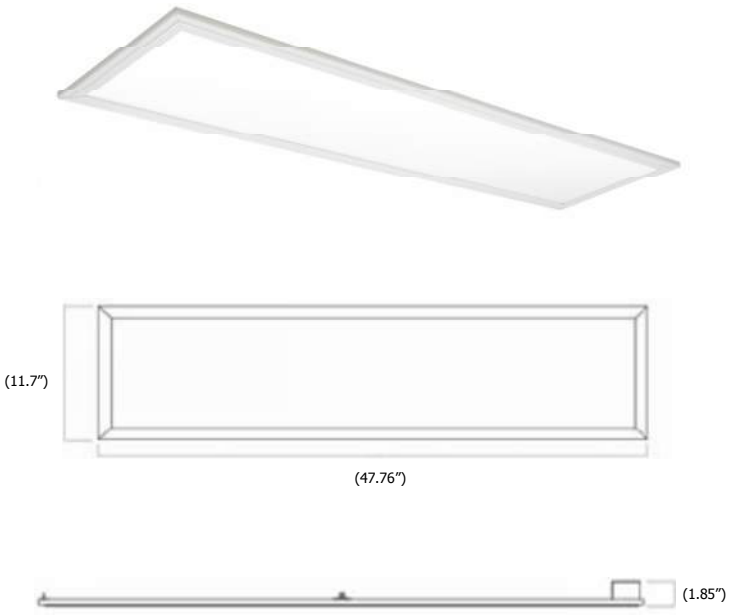

(L) 47.76″ (1213mm)
(W) 11.7″ (298mm)
(H) 1.85″ (47mm)
Weight: 10.14 lbs.

Ordering Information

	ITEM	MODEL	SIZE / SHAPE	CCT	LUMEN	WATTS	LM/W	DLC LISTED
Type A2	399556	OLPL14-4W-UNV	1' x 4'	3500K	3250	36	89	
	399508	OLPL14-4N-UNV	1' x 4'	4000K	3250	36	99	✓
	399509	OLPL14-4C-UNV	1' x 4'	5000K	3250	36	89	
Type A1	399540	OLPL14-5W-UNV	1' x 4'	3500K	4350	52	83	
	399541	OLPL14-5N-UNV	1' x 4'	4000K	4750	52	92	
	399542	OLPL14-5C-UNV	1' x 4'	5000K	4700	52	90	

OLPL14 Series
1′ x 4′ LED Edge-Lit Panel

*NOTE: Photometrics for OLPL14-4N-UNV
IES Files Available Upon Request

CANDELA DISTRIBUTION

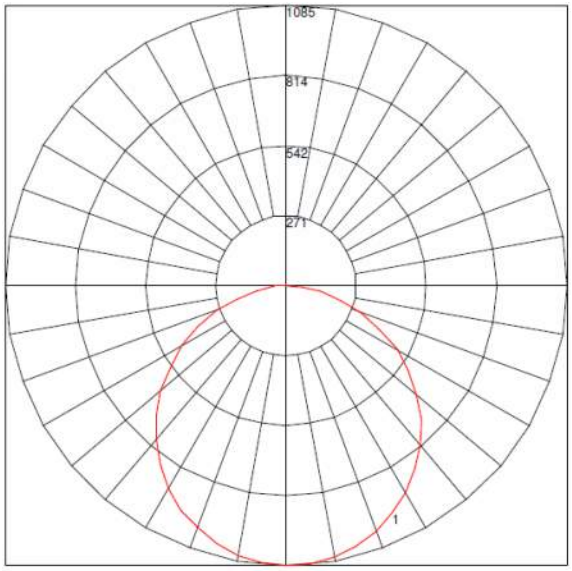

Maximum Candela = 1084.728 Located At Horizontal Angle = 0, Vertical Angle = 0
1 - Vertical Plane Through Horizontal Angles (0 - 180) (Through Max. Cd.)

Recommended Dimmers
Option #1: Lutron NTSTV-DV w/PP120
Option #2: Lutron DVTV
Option #3 Cooper DF-10
Note: The inclusion of a dimmer on this list does not guarantee compatibility in all installations and conversely, the absence of a dimmer from this list doesn't imply incompatibility.

IES INDOOR REPORT
PHOTOMETRIC FILENAME : GO1307190203A, LM-79, TESTREPORT.IES

COEFFICIENTS OF UTILIZATION - ZONAL CAVITY METHOD

Effective Floor Cavity Reflectance 0.20

RC	80				70				50			30			10			0
RW	70	50	30	10	70	50	30	10	50	30	10	50	30	10	50	30	10	0
0	119	119	119	119	116	116	116	116	111	111	111	106	106	106	102	102	102	100
1	108	104	99	95	106	101	97	94	97	94	91	93	90	88	89	87	85	83
2	99	90	83	77	96	88	82	76	85	79	75	81	77	73	78	75	71	69
3	90	79	71	64	87	77	70	64	74	68	62	72	66	61	69	64	60	58
4	82	70	61	54	80	69	60	54	66	59	53	64	57	52	61	56	52	49
5	75	62	53	47	73	61	53	46	59	52	46	57	51	45	55	49	45	43
6	70	56	47	41	68	55	47	40	53	46	40	52	45	40	50	44	39	37
7	65	51	42	36	63	50	42	36	49	41	35	47	40	35	46	40	35	33
8	60	46	38	32	58	46	38	32	44	37	32	43	36	31	42	36	31	29
9	56	43	34	29	55	42	34	29	41	34	28	40	33	28	39	33	28	26
10	53	39	31	26	51	39	31	26	38	31	26	37	30	26	36	30	26	24

LITHONIA LIGHTING®

Catalog Number	
Notes	
Type	

LDN6

6" OPEN and WALLWASH LED
Non-IC
New Construction Downlight

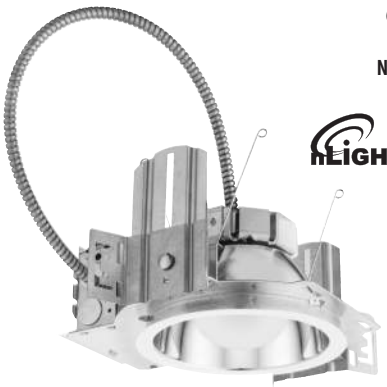

FEATURES & SPECIFICATIONS

INTENDED USE — Typical applications include corridors, lobbies, conference rooms and private offices.

CONSTRUCTION — Galvanized steel mounting/plaster frame; galvanized steel junction box with bottom-hinged access covers and spring latches. Reflectors are retained by torsion springs.

Vertically adjustable mounting brackets with commercial bar hangers provide 3-3/4" total adjustment.

Two combination ½"-3/4" and four ½" knockouts for straight-through conduit runs. Capacity: 8 (4 in, 4 out). No. 12 AWG conductors, rated for 90°C.

Accommodates 12"-24" joist spacing.

Passive cooling thermal management for 25°C standard; high ambient (40°C) option available. Light engine and drivers are accessible from above or below ceiling.

Max ceiling thickness 1-1/2".

OPTICS — LEDs are binned to a 3-step SDCM; 80 CRI minimum.

LED light source concealed with diffusing optical lens.

General illumination lighting with 1.0 S/MH and 55° cutoff to source and source image.

Self-flanged anodized reflectors in specular, semi-specular, or matte diffuse finishes. Also available in white and black painted reflectors.

ELECTRICAL — Multi-volt (120-277V, 50/60Hz) eldoLED 0-10V dimming drivers mounted to junction box, 10% or 1% minimum dimming level available.

0-10V dimming fixture requires two (2) additional low-voltage wires to be pulled.

70% lumen maintenance at 50,000 hours.

LISTINGS — Certified to US and Canadian safety standards. Damp location standard (wet location, covered ceiling optional). ENERGY STAR® certified product.

WARRANTY — 5-year limited warranty. Complete warranty terms located at www.acuitybrands.com/CustomerResources/Terms_and_conditions.aspx

Note: Actual performance may differ as a result of end-user environment and application.

All values are design or typical values, measured under laboratory conditions at 25 °C.

Specifications subject to change without notice.

A+ Capable options indicated by this color background.

ORDERING INFORMATION Lead times will vary depending on options selected. Consult with your sales representative.

Example: LDN6 35/15 L06AR LSS MVOLT EZ10

LDN6															
Series	**Color temperature**		**Lumens**[1]				**Aperture/Trim Color**				**Finish**		**Voltage**	
LDN6 6" round	27/ 2700K		05 500 lumens		25 2500 lumens		L06 Downlight		AR Clear		LSS Semi-specular		MVOLT Multi-volt	
	30/ 3000K		10 1000 lumens B2		30 3000 lumens		LW6 Wallwash		WR[2] White		LD Matte diffuse		120 120V	
	35/ 3500K		15 1500 lumens		40 4000 lumens				BR[2] Black		LS Specular		277 277V	
	40/ 4000K		20 2000 lumens B1		50 5000 lumens								347[3] 347V	
	50/ 5000K													

Driver		Options			
EZ10	eldoLED 10% 0-10V	SF[4]	Single fuse	HAO[8]	High ambient option
EZ1	eldoLED 1% 0-10V	TRW[5]	White painted flange	CP	Chicago Plenum
		TRBL[5]	Black painted flange	WL	Wet location
		EL[6]	Batterypack with integral test switch	RRL__	RELOC®-ready luminaire connectors enable a simple and consistent factory installed option across all ABL luminaire brands. Refer to RRL for complete nomenclature. Available only in RRLA, RRLB, RRLAE, and RRLC12S.
		ELR	Batterypack with remote test switch		
		NPS80EZ[7]	nLight® dimming pack controls 0-10V eldoLED drivers.		
		NPS80EZER[7]	nLight® dimming pack controls 0-10V eldoLED drivers. ER controls fixtures on emergency circuit.	USPOM	US point of manufacture

Accessories: *Order as separate catalog number.*

EAC ISSM 375	Compact interruptible emergency AC power system
EAC ISSM 125	Compact interruptible emergency AC power system
GRA68 JZ	Oversized trim ring with 8" outside diameter [1]
SCA6	Sloped ceiling adapter. Refer to TECH-SCA for more options.

Notes
1. Overall height varies based on lumen package; refer to dimensional chart on page 3.
2. Not available with finishes.
3. Not available with emergency options.
4. 120V only.
5. Available with clear (AR) reflector only.
6. Add "SD" for self-diagnostic option (i.e. ELSD)
7. Must specify voltage 120V or 277V.
8. Fixture height is 6.5" for all lumen packages with HAO.

LDN6

PHOTOMETRY

Distribution Curve | **Distribution Data** | **Output Data** | **Coefficient of Utilization** | **Illuminance Data at 30" Above Floor for a Single Luminaire**

LDN6 35/10 L06AR, input watts: 12.75, delivered lumens: 1082, LM/W = 84.86, spacing criterion at 0= 1.02, test no. ISF 30716P31.

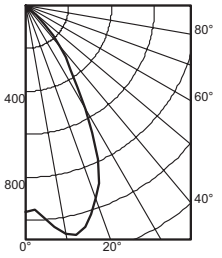

	Ave	Lumens
0	961	
5	992	98
15	1064	295
25	789	353
35	362	235
45	121	96
55	2	4
65	1	1
75	0	0
85	0	0
90	0	

Zone	Lumens	% Lamp
0° - 30°	746.1	69.0
0° - 40°	981.1	90.7
0° - 60°	1080.9	99.9
0° - 90°	1082.0	100.0
90° - 120°	0.0	0.0
90° - 130°	0.0	0.0
90° - 150°	0.0	0.0
90° - 180°	0.0	0.0
0° - 180°	1082.0	*100.0

*Efficiency

pf	20%								
pc	80%			70%			50%		
pw	50%	30%	10%	50%	30%	10%	50%	30%	10%
0	119	119	119	116	116	116	111	111	111
1	111	108	106	109	106	104	104	103	101
2	103	99	95	101	97	94	98	95	92
3	96	91	87	94	90	86	92	88	85
4	89	84	79	88	83	79	86	81	78
5	83	77	73	82	77	73	81	76	72
6	78	72	68	77	72	67	76	71	67
7	73	67	63	73	67	63	71	66	62
8	69	63	59	68	62	58	67	62	58
9	65	59	55	64	59	55	63	58	54
10	61	55	51	61	55	51	60	55	51

		50% beam - 54.5°		10% beam - 82.2°	
Mounting Height	Inital FC Center Beam	Diameter	FC	Diameter	FC
8.0	31.8	5.7	15.9	9.6	3.2
10.0	17.1	7.7	8.5	13.1	1.7
12.0	10.6	9.8	5.3	16.6	1.1
14.0	7.3	11.8	3.6	20.1	0.7
16.0	5.3	13.9	2.6	23.6	0.5

LDN6 35/30 L06AR, input watts: 34.69, delivered lumens: 3033.9, LM/W = 87.45, spacing criterion at 0= 1.02, test no. ISF 30716P22.

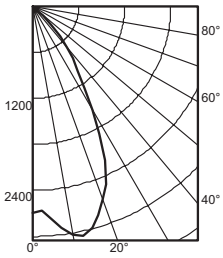

	Ave	Lumens
0	2693	
5	2782	274
15	2984	827
25	2212	991
35	1014	659
45	339	268
55	4	12
65	2	2
75	1	1
85	0	0
90	0	

Zone	Lumens	% Lamp
0° - 30°	2092.2	69.0
0° - 40°	2751.0	90.7
0° - 60°	3030.8	99.9
0° - 90°	3033.9	100.0
90° - 120°	0.0	0.0
90° - 130°	0.0	0.0
90° - 150°	0.0	0.0
90° - 180°	0.0	0.0
0° - 180°	3033.9	*100.0

*Efficiency

pf	20%								
pc	80%			70%			50%		
pw	50%	30%	10%	50%	30%	10%	50%	30%	10%
0	119	119	119	116	116	116	111	111	111
1	111	108	106	109	106	104	104	103	101
2	103	99	95	101	97	94	98	95	92
3	96	91	87	94	90	86	92	88	85
4	89	84	79	88	83	79	86	81	78
5	83	77	73	82	77	73	81	76	72
6	78	72	68	77	72	67	76	71	67
7	73	67	63	73	67	63	71	66	62
8	69	63	59	68	62	58	67	62	58
9	65	59	55	64	59	55	63	58	54
10	61	55	51	61	55	51	60	55	51

		50% beam - 54.5°		10% beam - 82.2°	
Mounting Height	Inital FC Center Beam	Diameter	FC	Diameter	FC
8.0	89.0	5.7	44.5	9.6	8.9
10.0	47.9	7.7	23.9	13.1	4.8
12.0	29.8	9.8	14.9	16.6	3.0
14.0	20.4	11.8	10.2	20.1	2.0
16.0	14.8	13.9	7.4	23.6	1.5

LDN6 35/50 L06AR, input watts: 55.56, delivered lumens: 4922.1, LM/W = 88.59, spacing criterion at 0= 1.02, test no. ISF 30716P40.

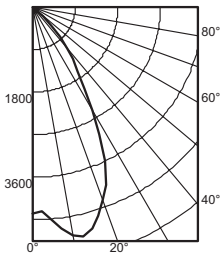

	Ave	Lumens
0	4370	
5	4513	445
15	4841	1341
25	3589	1608
35	1645	1069
45	550	435
55	7	19
65	3	3
75	2	2
85	0	0
90	0	

Zone	Lumens	% Lamp
0° - 30°	3394.2	69.0
0° - 40°	4463.2	90.7
0° - 60°	4917.1	99.9
0° - 90°	4922.1	100.0
90° - 120°	0.0	0.0
90° - 130°	0.0	0.0
90° - 150°	0.0	0.0
90° - 180°	0.0	0.0
0° - 180°	4922.1	*100.0

*Efficiency

pf	20%								
pc	80%			70%			50%		
pw	50%	30%	10%	50%	30%	10%	50%	30%	10%
0	119	119	119	116	116	116	111	111	111
1	111	108	106	109	106	104	104	103	101
2	103	99	95	101	97	94	98	95	92
3	96	91	87	94	90	86	92	88	85
4	89	84	79	88	83	79	86	81	78
5	83	77	73	82	77	73	81	76	72
6	78	72	68	77	72	67	76	71	67
7	73	67	63	73	67	63	71	66	62
8	69	63	59	68	62	58	67	62	58
9	65	59	55	64	59	55	63	58	54
10	61	55	51	61	55	51	60	55	51

		50% beam - 54.5°		10% beam - 82.2°	
Mounting Height	Inital FC Center Beam	Diameter	FC	Diameter	FC
8.0	144.4	5.7	72.2	9.6	14.4
10.0	77.7	7.7	38.8	13.1	7.8
12.0	48.4	9.8	24.2	16.6	4.8
14.0	33.0	11.8	16.5	20.1	3.3
16.0	24.0	13.9	12.0	23.6	2.4

DOWNLIGHTING: One Lithonia Way Conyers, GA 30012 Phone: 800-315-4935 Fax: 770-860-3129 www.lithonia.com © 2014-2017 Acuity Brands Lighting, Inc. All rights reserved. Rev. 07/13/17

LDN6

* All dimensions are inches (centimeters) unless otherwise noted.

LDN6 1500 LUMEN

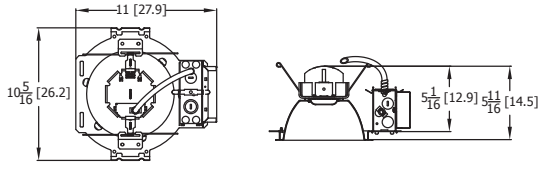

Aperture: 6-1/4 (15.9)
Ceiling Opening: 7-1/8 (18.1)
Overlap trim: 7-1/2 (19.1)

LDN6 3000 LUMEN

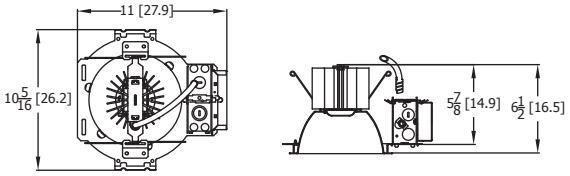

Aperture: 6-1/4 (15.9)
Ceiling Opening: 7-1/8 (18.1)
Overlap trim: 7-1/2 (19.1)

LDN6 5000 LUMEN

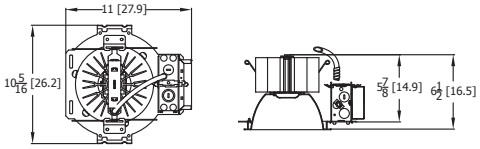

Marked Spacing: 24 x 24 x 10
Aperture: 6-1/4 (15.9)
Ceiling Opening: 7-1/8 (18.1)
Overlap trim: 7-1/2 (19.1)

LDN6 CP

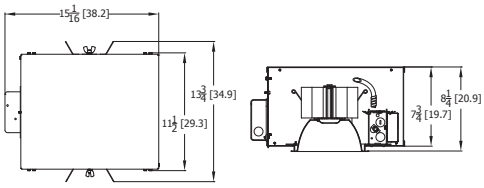

Marked Spacing above 3000 lumen: 24 x 24 x 10
Aperture: 6-1/4 (15.9)
Ceiling Opening: 7-1/8 (18.1)
Overlap trim: 7-1/2 (19.1)

LDN6 1500 EL-ELR

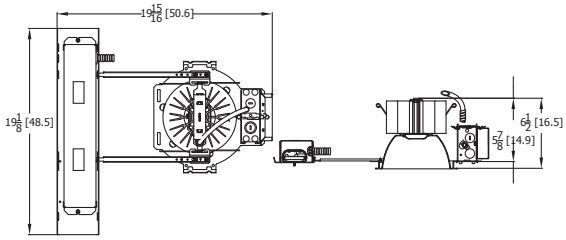

Marked Spacing above 3000 lumen: 24 x 24 x 10
Aperture: 6-1/4 (15.9)
Ceiling Opening: 7-1/8 (18.1)
Overlap trim: 7-1/2 (19.1)

LDN6			
Target Lumen	**Lumens @ 3500K**	**Wattage**	**LPW**
500	662.2	7.6	87.1
1000	1082.0	12.8	84.5
1500	1606.0	20.5	78.3
2000	2023.0	22.6	89.5
2500	2529.5	27.1	93.3
3000	3034.0	34.7	87.4
4000	3977.5	44.1	90.2
5000	4922.2	55.5	88.7

EL/ELR AVAILABILITY/COMPATIBILITY - INITIAL LUMENS			
Lumen package	**Watts**	**Initial lumens EL/ELR**	**Emergency LED driver**
600	12	500	PS1050
1000	18	575	PS1050
1500	26	640	PS1050
2000	35	690	PS1050

LUMEN OUTPUT MULTIPLIERS - FINISH			
	Clear (AR)	**White (WR)**	**Black (BR)**
Specular (LS)	1.0	N/A	N/A
Semi-specular (LSS)	0.950	N/A	N/A
Matte diffuse (LD)	0.85	N/A	N/A
Painted	N/A	0.87	0.73

LUMEN OUTPUT MULTIPLIERS - CCT					
	2700K	**3000K**	**3500K**	**4000K**	**5000K**
80CRI	0.950	0.966	1.000	1.025	1.101

Notes

- Tested in accordance with IESNA LM-79-08.
- Tested to current IES and NEMA standards under stabilized laboratory conditions.
- CRI: 80 typical.

© 2014-2017 Acuity Brands Lighting, Inc. All rights reserved.

LDN6

ADDITIONAL DATA

COMPATIBLE 0-10V WALL-MOUNT DIMMERS		
MANUFACTURER	PART NO.	POWER BOOSTER AVAILABLE
Lutron®	Diva® DVTV	
	Diva® DVSCTV	
	Nova T® NTFTV	
	Nova® NFTV	
Leviton®	AWSMT-7DW	CN100
	AWSMG-7DW	PE300
	AMRMG-7DW	
	Leviton Centura Fluorescent Control System	
	IllumaTech® IP7 Series	
Synergy®	ISD BC	
	SLD LPCS	RDMFC
	Digital Equinox (DEQ BC)	
Douglas Lighting Controls	WPC-5721	
Entertainment Technology	Tap Glide TG600FAM120 (120V)	
	Tap Glide Heatsink TGH1500FAM120 (120V)	
	Oasis 0A2000FAMU	
Honeywell	EL7315A1019	EL7305A1010 (optional)
	EL7315A1009	
HUNT Dimming	Preset slide: PS-010-IV and PS-010-WH	
	Preset slide: PS-010-3W-IV and PS-010-3W-WH	
	Preset slide, controls FD-010: PS-IFC-010-IV and PS-IFC-010-WH-120/277V	
	Preset slide, controls FD-010: PS-IFC-010-3W-IV and PS-IFC-010-3W-WH-120/277V	
	Remote mounted unit: FD-010	
Lehigh Electronic Products	Solitaire	PBX
PDM Electrical Products	WPC-5721	
Starfield Controls	TR61 with DALI interface port	RT03 DALInet Router
WattStopper®	LS-4 used with LCD-101 and LCD-103	

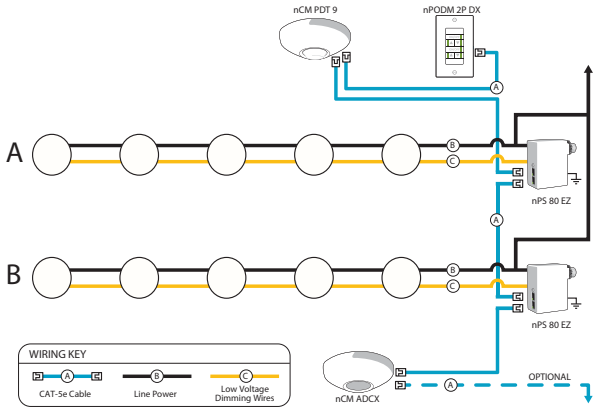

nLight® Control Accessories:
Order as separate catalog number.
Visit www.sensorswitch.com/nLight for complete listing of nLight controls.

WallPod stations	Model number
On/Off	nPODM [color]
On/Off & Raise/Lower	nPODM DX [color]
Graphic Touchscreen	nPOD GFX [color]
Photocell controls	**Model number**
Dimming	nCM ADCX

Occupancy sensors	Model number
Small motion 360°, ceiling (PIR / dual tech)	nCM 9 / nCM PDT 9
Large motion 360°, ceiling (PIR / dual tech)	nCM 10 / nCM PDT 10
Wide view (PIR / dual tech)	nWV 16 / nWV PDT 16
Wall Switch w/ Raise/Lower (PIR / dual tech)	nWSX LV DX / nWSX PDT LV DX
Cat-5 cables (plenum rated)	**Model number**
10', CAT5 10FT	CAT5 10FT J1
15', CAT5 15FT	CAT5 15FT J1

A+ Capable Luminaire

This item is an A+ capable luminaire, which has been designed and tested to provide consistent color appearance and out-of-the-box control compatibility with simple commissioning.

- All configurations of this luminaire meet the Acuity Brands' specification for chromatic consistency
- This luminaire is part of an A+ Certified solution for nLight® control networks when ordered with drivers marked by a shaded background*
- This luminaire is part of an A+ Certified solution for nLight control networks, providing advanced control functionality at the luminaire level, when selection includes driver and control options marked by a shaded background*

To learn more about A+, visit www.acuitybrands.com/aplus.

*See ordering tree for details

DOWNLIGHTING: One Lithonia Way Conyers, GA 30012 Phone: 800-315-4935 Fax: 770-860-3129 www.lithonia.com © 2014-2017 Acuity Brands Lighting, Inc. All rights reserved. Rev. 07/13/17

LITHONIA LIGHTING®

Catalog Number	
Notes	
Type	

LDN3

3" OPEN
Non-IC
New Construction Downlight

FEATURES & SPECIFICATIONS

INTENDED USE — Typical applications include corridors, lobbies, conference rooms and private offices.
CONSTRUCTION — Install from below construction standard.
Additional mounting options available including new construction mounting pan and Chicago plenum.
Ambient operating temperature: 25 °C. High ambient option available.
Light engine and driver are accessible from above or below ceiling.
Passive cooling thermal management
Max ceiling thickness 1-1/4"
OPTICS — 3 SDCM; 80 CRI typical
Diffusing lens covers optical chamber
55° cutoff to source and source image
Self-flanged anodized reflectors in specular, semi-specular, or matte diffuse finishes.
ELECTRICAL — 120V TRIAC or ELV dimming and Multi-volt 0-10V dimming available.
0-10V dimming fixture requires two (2) additional low-voltage wires to be pulled
70% lumen maintenance at 50,000 hours
LISTINGS — Certified to US and Canadian safety standards. Damp location standard (wet location, covered ceiling optional).
WARRANTY — 5-year limited warranty. Complete warranty terms located at www.acuitybrands.com/CustomerResources/Terms_and_conditions.aspx
Note: Actual performance may differ as a result of end-user environment and application.
All values are design or typical values, measured under laboratory conditions at 25 °C.
Specifications subject to change without notice.

A+ Capable options indicated by this color background.

ORDERING INFORMATION

Lead times will vary depending on options selected. Consult with your sales representative.

Example: LDN3 35/10 LO3AR LSS MVOLT UGZ

LDN3					
Series	**Color temperature**	**Lumens**	**Aperture/Trim Color**		**Finish**
LDN3 3" round	27/ 2700K	05 500 lumens	LO3 Downlight	AR Clear	LSS Semi-specular
	30/ 3000K	10 1000 lumens	LW3 Wallwash	WR[2] White	LD Matte diffuse
	35/ 3500K	15[1] 1500 lumens		BR[2] Black	LS Specular
	40/ 4000K				

Voltage	**Driver**	**Options**			
MVOLT[3] Multi-volt	UGZ10 Universal dimming to 10% (0-10V, 120V, Triac, or ELV	SF[6]	Single Fuse	HAO	High ambient Option (40°C)
120 120V	UGZ Universal dimming to 1% (0-10V, 120V, Triac, or ELV	TRW[7]	White painted flange	CP	Chicago Plenum
277 277V		TRBL[7]	Black painted flange	WL	Wet location
347[4,5] 347V		ELR[8]	Batterypack (remote)	NCH	New construction housing
		NPP16D[4,5,6]	nLight network power/relay pack with 0-10V dimming.		
		NPP16DER[4,5,6]	nLight network power/relay pack with 0-10V dimming. ER controls fixtures on emergency circuit.		

Notes
1 1500lm not available with HAO option.
2 Not available with finishes.
3 Multi-volt 120-277V.
4 Factory supplied device shipped separately. Field installation required.
5 Access required to location of remote mounted device.
6 Must specify voltage.
7 Not required with WR and BR options.
8 Only available with NCH option.

LDN3

PHOTOMETRY

Distribution Curve | **Distribution Data** | **Output Data** | **Coefficient of Utilization** | **Illuminance Data at 30″ Above Floor for a Single Luminaire**

LDN3CYL 35/10 LO3AR LS, input watts: 14.31, delivered lumens: 999.8, LM/W = 69.8, spacing criterion at 0 = 1.05, test no. ISF34000SP

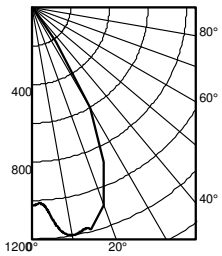

	Ave	Lumens
0	1026	
5	1078	108
15	1191	327
25	883	392
35	216	159
45	7	9
55	2	2
65	1	1
75	0	0
85	0	0
90	0	

Zone	Lumens	% Lamp
0° - 30°	827.0	82.9
0° - 40°	986.0	98.8
0° - 60°	997.1	99.9
0° - 90°	997.9	100.0
90° - 120°	0.0	0.0
90° - 130°	0.0	0.0
90° - 150°	0.0	0.0
90° - 180°	0.0	0.0
0° - 180°	997.9	*100.0

*Efficiency

pf	80%			70%			50%		
pc	50%	30%	10%	50%	30%	10%	50%	30%	10%
pw									
0	119	119	119	116	116	116	111	111	111
1	111	109	107	109	107	105	105	103	102
2	104	101	97	103	99	96	99	97	94
3	98	93	90	97	92	89	94	90	88
4	92	87	83	91	86	83	89	85	82
5	87	81	77	86	81	77	84	80	76
6	82	76	72	81	76	72	80	75	72
7	77	72	68	77	72	68	76	71	67
8	73	68	64	73	68	64	72	67	64
9	70	64	60	69	64	60	68	63	60
10	66	61	57	66	60	57	65	60	57

		50% beam - 55.2°		10% beam - 71.3°	
Mounting Height	Inital FC Center Beam	Diameter	FC	Diameter	FC
8.0	33.9	5.7	17.0	7.9	3.4
10.0	18.2	7.8	9.1	10.8	1.8
12.0	11.4	9.9	5.7	13.6	1.1
14.0	7.8	12.0	3.9	16.5	0.8
16.0	5.6	14.1	2.8	19.4	0.6

DOWNLIGHTING: One Lithonia Way Conyers, GA 30012 Phone: 800-315-4935 Fax: 770-860-3129 www.lithonia.com © 2015-2017 Acuity Brands Lighting, Inc. All rights reserved. Rev. 05/04/17

LDN3

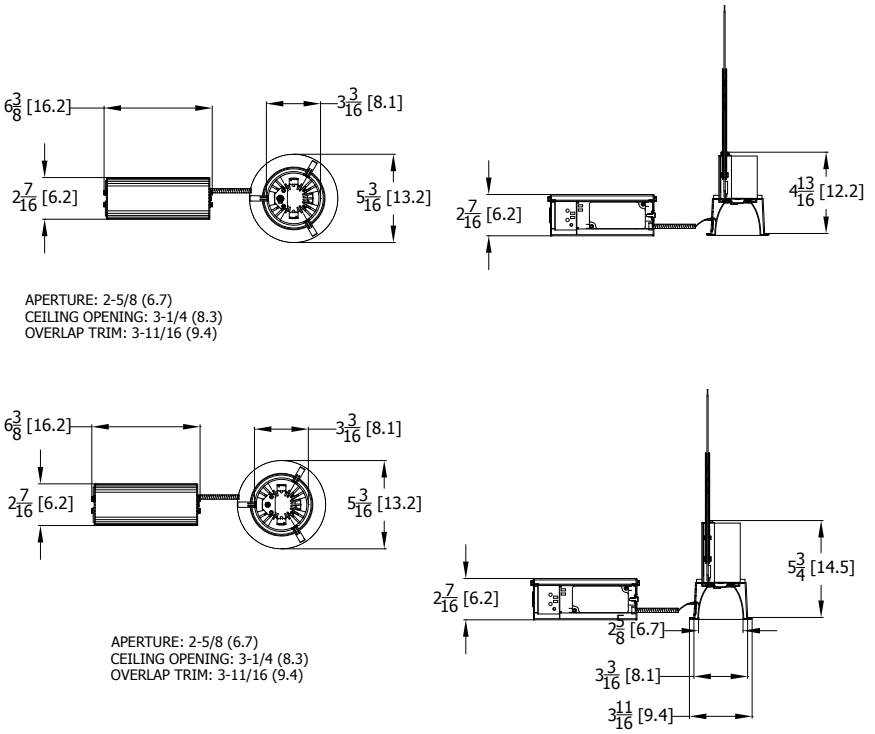

Notes

- Tested in accordance with IESNA LM-79-08.
- Tested to current IES and NEMA standards under stabilized laboratory conditions.
- CRI: 80 typical.

DOWNLIGHTING: One Lithonia Way Conyers, GA 30012 Phone: 800-315-4935 Fax: 770-860-3129 www.lithonia.com © 2015-2017 Acuity Brands Lighting, Inc. All rights reserved. Rev. 05/04/17

LDN3

ADDITIONAL DATA

COMPATIBLE 0-10V AND LINE VOLTAGE DIMMERS		
MANUFACTURER	PART NO.	CONTOL DEVICE DIM CURVE
Synergy®	ISD 400 ELV 120	Logarithmic
	ISD 600 I 120	Logarithmic
	ISD 1000 I 120	Logarithmic
Leviton®	IllumaTech-IPE04	Logarithmic
	IllumaTech-IPI06	Logarithmic
	IllumaTech-IPI10	Logarithmic
	IllumaTech- IPL06-10	Logarithmic
	Sureslide 6633-P 600-watt 3-way	Linear
	Sureslide 6674-P 600-watt single pole	Linear
	Sureslide 6674-P 600-watt 3-way	Linear

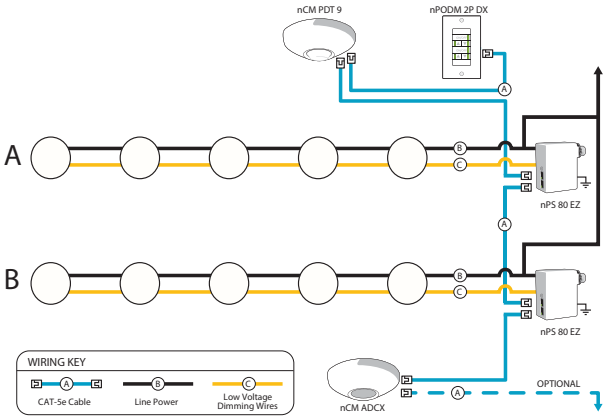

nLight® Control Accessories:
Order as separate catalog number. Visit www.sensorswitch.com/nLight for complete listing of nLight controls.

WallPod stations	**Model number**	**Occupancy sensors**	**Model number**
On/Off	nPODM [color]	Small motion 360°, ceiling (PIR / dual tech)	nCM 9 / nCM PDT 9
On/Off & Raise/Lower	nPODM DX [color]	Large motion 360°, ceiling (PIR / dual tech)	nCM 10 / nCM PDT 10
Graphic Touchscreen	nPOD GFX [color]	Wide view (PIR / dual tech)	nWV 16 / nWV PDT 16
Photocell controls	**Model number**	Wall Switch w/ Raise/Lower (PIR / dual tech)	nWSX LV DX / nWSX PDT LV DX
Dimming	nCM ADCX	**Cat-5 cables (plenum rated)**	**Model number**
		10', CAT5 10FT	CAT5 10FT J1
		15', CAT5 15FT	CAT5 15FT J1

DOWNLIGHTING: One Lithonia Way Conyers, GA 30012 Phone: 800-315-4935 Fax: 770-860-3129 www.lithonia.com © 2015-2017 Acuity Brands Lighting, Inc. All rights reserved. Rev. 05/04/17

LITHONIA LIGHTING®

Catalog Number	
Notes	
Type	

FEATURES & SPECIFICATIONS

INTENDED USE — Built on the compact, low-profile Z strip channel, this LED strip offers long maintenance-free life, several color temperatures, lumen outputs and lengths. Ideal for new construction and retrofit applications in T5 and T8 lengths. Ideal for uplight and downlight in commercial, retail, manufacturing, warehouse, cove and display applications. **Certain airborne contaminants can diminish the integrity of acrylic and/or polycarbonate.** Click here for Acrylic-Polycarbonate Compatibility table for suitable uses.

CONSTRUCTION — Compact-design channel and cover are formed from code-gauge cold-rolled steel. Easy to install row aligner included for continuous row mounting.

Finish: Paint options include high-gloss, baked white enamel (WH), galvanized (GALV), matte black (MB) and smoke gray (SKGY). After fabrication, five-stage iron phosphate pre-treatment ensures superior paint adhesion and rust resistance.

OPTICS — Standard diffuse snap on/snap off lens eliminates pixels, improves uniformity and minimizes glare. L/LENS option available.

ELECTRICAL — L70>60,000hours. Utilizes high-output LEDs integrated on a two-layer circuit board, ensuring cool-running operation. Optional internal pluggable wiring harness for reduced labor cost in row mounting applications. (See PLR_ ordering information on page 3.) Electronic LED driver is rated for 75 input watts maximum (see Operational Data on page two for actual wattage consumption), **multi-volt input and 0-10V dimming standard**. This fixture is designed to withstand a maximum line surge of 1.5kV at 0.75kA combination wave for indoor locations, for applications requiring higher level of protection additional surge protection must be provided.

LEDs provide nominal 80 CRI at 3000 K, 3500 K,4000 K, or 5000 K.

Lumen output up to 2,000 lumens per foot. In 86°F (30°C) ambient environments. Luminaire should be installed in applications where ambient temperatures do not exceed 86°F (30°C).

INSTALLATION — Tool-less channel cover for easy installation.

Fixture may be surface mounted (with or without ZSPRG hanger), pendant or stem mounted with appropriate mounting options. Three-point aligner locks in place for easy continuous row mounting.

LISTINGS — CSA certified to US and Canadian safety standards. For use in damp locations between -4°F (-20°C) and 86°F (30°C).

DesignLights Consortium® (DLC) qualified product. Not all versions of this product may be DLC qualified. Please check the DLC Qualified Products List at www.designlights.org to confirm which versions are qualified.

WARRANTY — 5-year limited warranty. Complete warranty terms located at: www.acuitybrands.com/CustomerResources/Terms_and_conditions.aspx

Note: Actual performance may differ as a result of end-user environment and application.

All values are design or typical values, measured under laboratory conditions at 25 °C.

Specifications subject to change without notice.

Z SERIES

LED Striplight

ZL1N

24", 48" and 96" Lengths

L/Lens

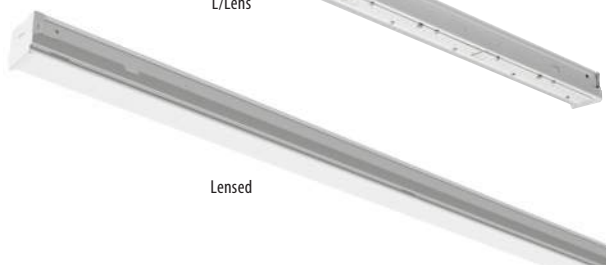

Lensed

A+ Capable Luminaire

This item is an A+ capable luminaire, which has been designed and tested to provide consistent color appearance and out-of-the-box control compatibility with simple commissioning.

- All configurations of this luminaire meet the Acuity Brands' specification for chromatic consistency
- This luminaire is part of an A+ Certified solution for nLight® or XPoint™ Wireless control networks marked by a shaded background*

To learn more about A+, visit www.acuitybrands.com/aplus.

*See ordering tree for details

ZL1N LED Striplight

A+ Capable options indicated by this color background.

ORDERING INFORMATION Lead times will vary depending on options selected. Consult with your sales representative.

Example: ZL1N L48 3000LM FST MVOLT 40K 80CRI WH

Series	Length	Reflectors[1]	Nominal lumens[2]	Diffuser	Voltage
ZL1N LED striplight	L24 24"	SMR Symmetric	1500LM 1,500 lumens[3]	FST Snap on frosted, diffuse	MVOLT 120-277V
			2500LM 2,500 lumens[3]	L/LENS No diffuser	120 120V
			3500LM 3,500 lumens	SBL FST Straight blade louver with snap on frosted, diffuse	208 208V
	L46 46"	ASR Asymmetric (L48 only)	3000LM 3,000 lumens		240 240V
	L48 48"	SMR Symmetric	5000LM 5,000 lumens		277 277V
			7000LM 7,000 lumens		347 347V[4]
TZL1N LED striplight	L92 92"	SMR Symmetric	6000LM 6,000 lumens		480 480V[4]
	L96 96"		10000LM 10,000 lumens		
			14000LM 14,000 lumens		

Color temperature	Color rendering index	Options		Paint finish
30K 3000 K	80CRI 80 CRI	PLR Plug-in wiring[5,6]	Cord sets:[8]	WH White
35K 3500 K	90CRI 90 CRI	PLR1LVG Plug-in wiring-low voltage[6]	CS1W Straight plug, 120V	GALV Galvanized
40K 4000 K		E7W Emergency battery pack[4,7]	CS3W Twist-lock, 120V	MB Matte black
50K 5000 K		OUTEND Cord set to exit endplate of fixture	CS7W Straight plug, 277V	SKGY Smoke gray
			CS11W Twist-lock, 277V	
			CS25W Twist-lock, 347V	
			CS97W Twist-lock, 480V	
			CS93W 600V SEOOW white cord, no plug (no voltage required)	

Accessories: *Order as separate catalog number.*

HC36	Hanger chain, 36"
ZACVH	Aircraft cable 10' (one pair)
ZLANGBKT	Luma-tilt™ angle bracket for shelf or ledge mounting only
NPP16D	nLight® switching/dimming module
LSXR	Sensor Switch® LSXR occupancy sensor[5]
ZSPRG	For 15/16" T-grid only
WGZ24	24" wireguard, white
WGZ48	48" wireguard, white[9]
ZLR L24 SYM UPL WH	24" symmetric reflector with uplight, white finish
ZLR L24 SYM WH	24" symmetric reflector, white finish
ZLR L46 SYM UPL WH	46" symmetric reflector with uplight, white finish
ZLR L46 SYM WH	46" symmetric reflector, white finish
ZLR L48 ASY WH	48" asymmetric reflector, white finish
ZLR L48 SYM UPL WH	48" symmetric reflector with uplight, white finish
ZLR L48 SYM WH	48" symmetric reflector, white finish
ZLR L92 SYM UPL WH	92" symmetric reflector with uplight, white finish
ZLR L92 SYM WH	92" symmetric reflector, white finish
ZLR L96 SYM UPL WH	96" symmetric reflector with uplight, white finish
ZLR L96 SYM WH	96" symmetric reflector, white finish

Notes

1 Optional. Reflectors ship separately.
2 See Operational Data on page 3 for actual lumens.
3 Not available with 0-10V dimming option.
4 Not available with L24, 24" fixture. 347V and 480V utilize a step-down transformer.
5 See ordering information on page 4.
6 Not available with cordsets.
7 Must specify voltage. 120, 208, 240 or 277V.
8 Cordsets exit back of fixture unless OUTEND option is specified.
9 Order 2 for tandem double length fixtures (TZL1N).

ZL1N LED Striplight

OPERATIONAL DATA

	Nominal lumen package	Length (inches)	Delivered Lumens 3000 K CCT @ 77°F (25°C) ambient temperature		Delivered Lumens 3500 K CCT @ 77°F (25°C) ambient temperature		Delivered Lumens 4000 K CCT @ 77°F (25°C) ambient temperature		Delivered Lumens 5000 K CCT @ 77°F (25°C) ambient temperature		Wattage @ 120V/277V	Comparable Light Source
			80 CRI	90 CRI	80 CRI	90 CRI	80 CRI	90 CRI	80 CRI	90 CRI		
Lensed	1500LM	24	1738	1409	1777	1467	1804	1494	1871	1528	15	1-lamp 17W T8
	2500LM	24	2265	1846	2315	1900	2351	1947	2438	1991	19	1-lamp 17W T8
	3500LM	24	3586	2924	3666	3026	3723	3084	3860	3152	31	1-lamp 32W T8, 1-lamp 54W T5HO, 50W HID
	3000LM	46 or 48	3172	2586	3243	2677	3293	2728	3415	2788	25	1-lamp 32W T8, 1-lamp 54W T5HO, 50W HID
	5000LM	46 or 48	4417	3601	4515	3727	4585	3798	4754	3882	34	2-lamp 32W T8, 1-lamp 54W T5HO, 70W HID
	7000LM	46 or 48	6535	5328	6681	5515	6785	5619	7035	5744	52	3-lamp 32W T8, 2-lamp 54W T5HO, 100W HID
	6000LM	92 or 96	6561	5349	6708	5537	6812	5642	7063	5767	48	3-lamp 32W T8, 2-lamp 54W T5HO, 100W HID
	10000LM	92 or 96	8687	7082	8881	7331	9019	7470	9351	7636	68	4-lamp 32W T8, 2-lamp 54W T5HO, 100W HID
	14000LM	92 or 96	12457	10513	12735	10665	12933	10711	13409	10949	104	4-lamp 32W T8, 3-lamp 54W T5HO, 150W HID
Unlensed	1500LM	24	1881	1534	1923	1588	1953	1618	2025	1654	15	1-lamp 17W T8
	2500LM	24	2452	1999	2506	2069	2545	2108	2639	2155	19	1-lamp 17W T8
	3500LM	24	3882	3165	3969	3276	4031	3338	4179	3412	31	1-lamp 32W T8, 1-lamp 54W T5HO, 50W HID
	3000LM	46 or 48	3434	2800	3511	2898	3565	2953	3697	3019	25	1-lamp 32W T8, 1-lamp 54W T5HO, 50W HID
	5000LM	46 or 48	4781	3898	4888	4035	4964	4111	5147	4203	34	2-lamp 32W T8, 1-lamp 54W T5HO, 70W HID
	7000LM	46 or 48	7075	5768	7233	5971	7345	6083	7616	6219	52	3-lamp 32W T8, 2-lamp 54W T5HO, 100W HID
	6000LM	92 or 96	7103	5791	7261	5995	7374	6108	7646	6243	48	3-lamp 32W T8, 2-lamp 54W T5HO, 100W HID
	10000LM	92 or 96	9404	7667	9614	7937	9764	8087	10123	8266	68	4-lamp 32W T8, 2-lamp 54W T5HO, 100W HID
	14000LM	92 or 96	13485	10994	13786	11381	14001	11596	14516	11853	104	4-lamp 32W T8, 3-lamp 54W T5HO, 150W HID

DIMENSIONS

All dimensions are shown in inches (centimeters) unless otherwise noted.

Specifications subject to change without notice.

PALLET DIMENSIONS

Length	Approximate weight	Fixtures per pallet	Approximate pallet dimensions (L x W x H)
L24	7 lbs.	408	46" X 51" X 32 11/16"
L46	11 lbs.	176	46" X 51" X 32 1/16"
L48	12 lbs.	176	46" X 51" X 31 3/8"
L92	22 lbs.	176	46" X 98 1/2" X 31 1/16"
L96	24 lbs.	176	46" X 98 1/2" X 31 1/16"

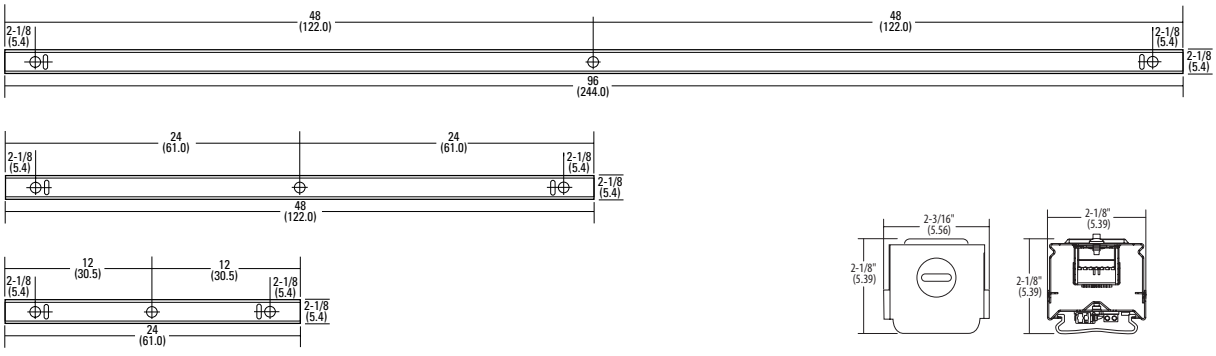

PHOTOMETRICS

Please see www.lithonia.com.

ZL1N LED Striplight

REFLECTORS (Optional)

L24 Reflector

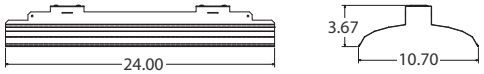

L48 Reflector

L96 Reflector

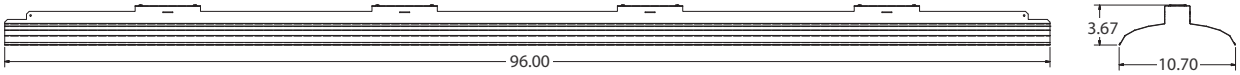

PHOTOMETRICS

Please see www.lithonia.com.

ZL1N LED Striplight

PRODUCT INFORMATION

Advanced plug-in system with three-circuit capability. Available on industrial and strip products and a variety of architectural products mounted in continuous rows. 1, 2, 3 and 4-lamp fixtures. PLR22 (2-circuit) and PLR33 (3-circuit) crossover harness switches hot circuit serving next fixture in row. Reduces fixture types on job for alternating circuit applications (see example below.)

Easy one-step installation, saves up to 35% on labor costs. Expanded switching flexibility helps save energy.

Rows can be 50% longer with two-circuit systems. Polarized, lock-together nylon connectors prevent miswiring in the field. #12 THHN conductor, rated 600V, 90°C. White neutral wire included. Grounding accomplished by fixture in-row connectors.

CSA certified systems available with up to 2 circuits. G ground required.

Note: Specifications subject to change without notice.

Wiring

PLR

Advanced 3-Circuit Plug-In

ORDERING INFORMATION Lead times will vary depending on options selected. Consult with your sales representative.

Series	Number of hot wires	Branch circuits	Dimming	Ground
PLR	(blank) Not required for 22 or 33	Circuits to which ballast is connected	LV Low-voltage dimming	(blank) No ground in PLR
PLR22	1 Black	(blank) Not required for 22 or 33		G Ground. Maximum 2 circuits
PLR33	2 Black and red	A Black wire		
	3 Black, red and blue	B Red wire		
		C Blue wire		

Typical Applications

- Multiple-circuit and single-circuit for longer continuous rows
- Multiple-circuit with alternating fixtures on separate circuits, 2-circuit (PLR 22) and 3-circuit (PLR 33)
- Multiple circuit with night-lights located along row as desired

TYPICAL APPLICATIONS										
PLR 3 C	PLR 3 C	PLR 3 C	PLR 3 C	PLR 2 B	PLR 2 B	PLR 2 B	PLR 2 B	PLR 1	PLR 1	PLR 1
(All PLR22)										
Circuit A	Circuit B	Circuit A	Circuit B	Circuit A	Circuit B	Circuit A	Circuit B	Circuit A	Circuit B	Circuit A
(All PLR33)										
Circuit A	Circuit B	Circuit C	Circuit A	Circuit B	Circuit C	Circuit A	Circuit B	Circuit C	Circuit A	Circuit B
PLR 3 A	PLR 3 A	PLR 3 A	PLR 3 C	PLR 3 B	PLR 3 B	PLR 3 B	PLR 3 C	PLR 3 A	PLR 3 A	PLR 3 A

PRODUCT INFORMATION

A standard occupancy time delay is also present to ensure lights turn off (once minimum on timer has also elapsed) if no occupancy is detected.

This timer is factory set at 10 minutes to promote energy savings, but is adjustable between 30 seconds and 30 minutes. These adjustments may be done through the unit's push-button.

FEATURES

- Four interchangeable lenses - high mount 360°, low mount 360°, high mount aisleway, and small motion 360°.
- Integrated mounting bracket drops lens down 3" from chase nipple - no bracket accessory required.
- 100% digital PIR detection - provides excellent RF immunity

Note: Specifications subject to change without notice.

Passive Infrared Indoor Occupancy Sensor

LSXR

Single Relay

AcuityControls Sensor Switch

ORDERING INFORMATION Lead times will vary depending on options selected. Consult with your sales representative.

Example: LSXR 10 ADC HVOLT 30M

LSXR									
Series	**Lens option**				**Dimming/photocell**				
LSXR Passive Infrared Indoor Occupancy Sensor	(blank)	No lens	610	High and low mount 360°	(blank)	None			
	6	High mount, 360°	650	High mount 360° and aisleway	HL	High/low occupancy operation			
	10	Low mount, 360°	3PK	High and low mount 360° and aisleway	P	Switching photocell (on/off)			
	50	High mount aisleway	4PK	All lenses	ADC	Dimming and switching photocell			
	9	Small motion, 360°			ANL	Dimming and switching photocell with high/low occupancy operation			

Voltage	Max dim level	Min dim level	Lead length	Temp humidity	Default time delay
(blank) 120-277 VAC (MVOLT)	(blank) 10 VDC	(blank) Minimum dimming level of ballast	(blank) 14"	(blank) None	(blank) 10 minutes (with minimum 15 minutes on time)
HVOLT 347-480 VAC	9H 9 VDC	1V 1 VDC	42L 42"	LT Low temperature	5M 5 minutes (LED only)
	8H 8 VDC	2V 2 VDC			15M 15 minutes
	7H 7 VDC	3V 3 VDC			20M 20 minutes
		4V 4 VDC			30M 30 minutes
		5V 5 VDC			
		6V 6 VDC			

For additional information see www.lithonia.com

ZL1N LED Striplight

OPTIONS AND ACCESSORIE

The Z Series fixture offers numerous options for almost every electrical and optical component, including a long list of field-installable accessories.

HANGER CHAIN

36" chain with Y hanger.

Order as:

HC36

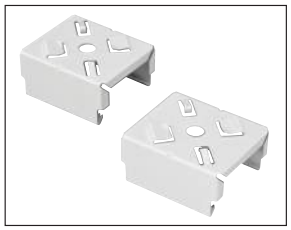

Z SPRING HANGER

Snap 'n' lock design requires no fasteners and can be used on T-grid ceiling or universal mounting systems.

Order as:

ZSPRG

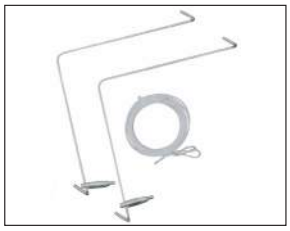

ZACVH HANGER

10' Aircraft cable with Y hanger.

Order as:

ZACVH

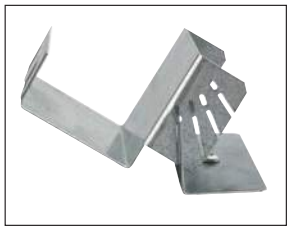

ANGLE MOUNTING BRACKET

Luma-tilt™ angle bracket ships as a pair

Order as:

ZLANGBKT

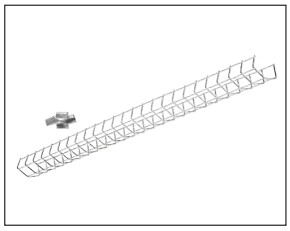

WIRE GUARD

Order as:

WGZ24

WGZ48

© 2013-2017 Acuity Brands Lighting, Inc. All rights reserved. Rev. 06/29/17

ECOSENSE®

RISE™

OVERVIEW • SPECIFICATIONS • ORDERING

INTERIOR + EXTERIOR | **F080 SINGLE**

DATE	PROJECT	FIRM	TYPE

RISE IS A SYSTEM OF BEAUTIFULLY DESIGNED OUTDOOR RATED LUMINAIRES THAT PROVIDE EFFICIENT AND POWERFUL LIGHT USING THE LATEST IN LED TECHNOLOGY. RISE F080 SINGLE IS A POWERFUL AND COMPACT LED LIGHT FIXTURE, DELIVERING UP TO 745 LUMENS, THAT CAN BE USED IN SPOT, ACCENT, LANDSCAPE AND FLOODLIGHT APPLICATIONS. ITS UNIQUE MACRO™ LOCK FEATURE ALLOWS FOR FULL 180 DEGREE TILT AND 360 DEGREE PAN AIMABILITY USING ONLY ONE TWIST.

FEATURES :

- POWERFUL CBCP
- ONLY 5° LASER SPOT
- EXTREMELY COMPACT
- POWERFUL OUTPUT 300-745LMS
- MACRO™ LOCK - 180° TILT AND 360° PAN
- 11 UNIQUE BEAM ANGLES
- MULTIVOLT (110V-277V)
- 8 CCTS: 2200K THROUGH 6500K
- 80+ AND 90+ CRI
- DIMMABLE TO 5%
- IP66 RATED

FIXTURE MODEL	FIXTURE CONFIG.	POWER/ LUMEN OUTPUT*	CCT/ COLOR	CRI	BEAM ANGLE	FINISHES	ACCESSORIES	WIRING AND MOUNTING
F080	1S							
F080	1S - Single Head	LO - Low Output MO - Medium Output HO - High Output	22 - 2200K 25 - 2500K 27 - 2700K 30 - 3000K 35 - 3500K 40 - 4000K 50 - 5000K 65 - 6500K RD - Red GR - Green BL - Blue AM - Amber	8 - 80 9 - 90* X - For RD, GR, BL, AM *90 CRI not available in 2200K, 2500K, 5000K, and 6500K	05 - Laser Spot (5°) 10 - Very Narrow Spot (10°) 15 - Narrow Spot (15°) 20 - Spot (20°) 40 - Flood (40°) 60 - Wide Flood (60°) 80 - Very Wide Flood (80°) E1 - Elliptical 1 (15°x60°) E2 - Elliptical 2 (30°x60°) E3 - Elliptical 3 (60°x15°) E4 - Elliptical 4 (60°x30°)	K - Black Z - Bronze S - Silver W - White C - Custom* *Select color at pantone.com Selected by Architect	X - No Accessory H - Half Snoot F - Full Snoot C - Custom Will ship as X if not specified	A - 19" Flying Leads - Internal Cable IC; Bottom Exit; 1/2" NPT ; UL/CE Rated B* - 3.3' External Cable Side Exit; Surface Mount ; UL/CE Rated C* - 3.3' External Cable Bottom Exit; Surface Mount - 1/2" NPT ; UL/ CE Rated Will ship as A if not specified

EXAMPLE: F080-1S-LO-22-8-05-S-X-A

*See Photometry Chart for Lumen Data

PERFORMANCE	WATTS	POWER	LUMEN OUTPUT	OPTIC	EFFICACY	CBCP
	4	Low Output	309	5°	77	21,991
	7.5	Medium Output	531	5°	71	37,824
	11.5	High Output	745	5°	65	53,048

ALL LUMEN DATA IS FROM 4000K 80CRI FIXTURES. PLEASE SEE PHOTOMETRY SPEC SHEET FOR ADDITIONAL LUMEN DATA.

COLOR RENDERING INDEX 80+, 90+
COLOR CONSISTENCY 3-STEP MACADAM ELLIPSE

LUMEN DEPRECIATION / RATED LIFE

WATTS	L70 @ 25C	L70 @ 50C	L90 @ 25C	L90 @ 50C
HIGH	>60,500* >(181,000)**	>36,3000* >(109,000)**	>60,500* >(69,800)**	>31,700*

* ENERGY STAR REPORTED TESTING HOURS TO DATE. CALCULATIONS FOR LED FIXTURES ARE BASED ON MEASUREMENTS THAT COMPLY WITH IES LM-80 TESTING PROCEDURES AND IES TM-21 CALCULATOR
** ESTIMATED HOURS

NOTE: Information on this Spec Sheet is subject to change, please visit ecosenselighting.com/rise for the most updated information.

ECOSENSE LIGHTING INC.
837 NORTH SPRING STREET
SUITE 103
LOS ANGELES, CA 90012

P • 310.496.6255
F • 310.496.6256
T • 855.632.6736
855.6.ECOSEN

SPECIFICATIONS SUBJECT TO CHANGE WITHOUT NOTICE. VISIT ECOSENSELIGHTING.COM FOR THE MOST CURRENT SPECIFICATIONS.
© 2017 ECOSENSE LIGHTING INC. ALL RIGHTS RESERVED. ECOSENSE, THE ECOSENSE LOGO, RISE, TROV, SLIM COVE AND ECOSPEC ARE REGISTERED TRADEMARKS OF ECOSENSE LIGHTING INC.
FREEDOM TO CREATE™

ECOSENSE® RISE™

OVERVIEW • SPECIFICATIONS • ORDERING

INTERIOR + EXTERIOR | **F080 SINGLE**

DATE	PROJECT	FIRM	TYPE

ELECTRICAL	**WATTAGE**	LOW OUTPUT = 4W; MEDIUM OUTPUT = 7.5W; HIGH OUTPUT = 11.5W
	POWER FACTOR	>0.9 for 120V (HO, MO, LO), 230V (HO, MO), 277V (HO)
	THD	<0.2 for 120V (HO, MO, LO), 230V (HO, MO), 277V (HO)
	OPERATING VOLTAGE	MULTIVOLT: 110-277VAC, 50/60 Hz
	DRIVER	INTEGRAL TO FIXTURE; DE-RATED POWER AND SYNCHRONOUS START-UP AT FULL BRIGHTNESS
	STARTUP TEMPERATURE	-40˚F TO 122˚F (-40˚C TO 50˚C)
	OPERATING TEMPERATURE	-40˚F TO 122˚F (-40˚C TO 50˚C)
	STORAGE TEMPERATURE	-40˚F TO 176˚F (-40˚C TO 80˚C)
CONTROL	**DIMMING**	110-277VAC, ELV TYPE, REVERSE PHASE, TRAILING EDGE
PHYSICAL	**DIMENSIONS**	W 2.49" x H 8.13" x L 6.97" ; (63.33mm x 206.45mm x 177.05mm)
	HOUSING/LENS	EXTRUDED ALUMINUM; UV STABILIZED POLYCARBONATE; STAINLESS STEEL FASTENERS
	WEIGHT	1.25LBS / 0.56KG
	ENVIRONMENT	OUTDOOR • UL CERTIFIED FOR WET LOCATIONS IP66 IMPACT RATED TO IK10
	MOUNTING OPTIONS	A - FLYING LEADS - INTERNAL CABLE IC; BOTTOM EXIT; 1/2" NPT ; UL/ CE RATED B - EXTERNAL CABLE SIDE EXIT; SURFACE MOUNT ; UL/CE RATED C - EXTERNAL CABLE BOTTOM EXIT; 1/2" NPT ; UL/CE RATED
	JUNCTION BOX	PROVIDED BY OTHERS
	WIRING	LENGTH OF FLYING LEADS 19" (482.6mm) LENGTH OF EXTERNAL CABLE 3.3' (1m)
	TOOLS	2.5mm HEX KEY AND PHILLIPS #0 SCREWDRIVER FOR INTERCHANGEABLE LENS + SNOOTS 4mm HEX KEY FOR AIMING 5mm HEX KEY FOR MAIN TILT ARM
	WIND LOAD (EPA)	EFFECTIVE PROJECTED AREA 0.14ft²
	CORROSION RESISTANT	RISE HAS A HIGH-PERFORMING, CORROSION-RESISTANT FINISH THAT USES HIGH DURABILITY TRIGLYCIDYL ISOCYANURATE (TGIC) POWDER COATINGS SPECIFICALLY DESIGNED FOR EXTERIOR AND WEATHER EXPOSURE. THIS FINISH IS TESTED AGAINST THE MOST SEVERE SPECIFICATIONS, PROVIDING SIGNIFICANT RESISTANCE TO COLOR CHANGE.
FIXTURE RATING & CERTIFICATIONS	**CE, UL CERTIFIED** **RoHS COMPLIANT, IK10**	CE c UL us LISTED RoHS COMPLIANT IK10
LIMITED WARRANTY	**5 YEARS**	

0-10V CONTROL OPTIONS

100-120VAC / 277VAC Linear Dimming Control Module 0-10V - Plenum Rated **LDCM-PL-120-277-010V-GR**

All products come standard with ELV dimming capabilities. 0-10V Control options required for operation at 0-10V.

OPTIONAL ACCESSORIES

Snoots

Half Snoot, Color Finish (K=Black, Z=Bronze, S=Silver, W=White, C=Custom) ..... **F080-H-(K,Z,S,W,C)**

Full Snoot, Color Finish (K=Black, Z=Bronze, S=Silver, W=White, C=Custom) ..... **F080-F-(K,Z,S,W,C)**

Interchangeble Lens

5 Degree **F080-LENS-05**

10 Degree **F080-LENS-10**

15 Degree **F080-LENS-15**

20 Degree **F080-LENS-20**

40 Degree **F080-LENS-40**

60 Degree **F080-LENS-60**

80 Degree **F080-LENS-80**

15x60 Degree **F080-LENS-15x60**

30x60 Degree **F080-LENS-30x60**

60x15 Degree **F080-LENS-60x15**

60x30 Degree **F080-LENS-60x30**

Full Set of Beam Angle Lens Degree (5, 10, 15, 20, 40, 60, 80, 15x60, 30x60, 60x15, 60x30) **F080-LENS-FULLSET**

Canopy Plate

RISE Canopy Plate (K=Black, Z=Bronze, S=Silver, W=White, C=Custom) ..... **RISE-CANOPY-04-(K,Z,S,W,C)**

NOTE: Information on this Spec Sheet is subject to change, please visit ecosenselighting.com/rise for the most updated information.

ECOSENSE LIGHTING INC.
837 NORTH SPRING STREET
SUITE 103
LOS ANGELES, CA 90012

P • 310.496.6255
F • 310.496.6256
T • 855.632.6736
855.6.ECOSEN

SPECIFICATIONS SUBJECT TO CHANGE WITHOUT NOTICE. VISIT **ECOSENSELIGHTING**.COM FOR THE MOST CURRENT SPECIFICATIONS.
© 2017 **ECOSENSE** LIGHTING INC. ALL RIGHTS RESERVED. **ECOSENSE**, THE **ECOSENSE** LOGO, **RISE**, **TROY**, **SLIM COVE** AND **ECOSPEC** ARE REGISTERED TRADEMARKS OF **ECOSENSE** LIGHTING INC.
FREEDOM TO CREATE™

ECOSENSE® RISE™

OVERVIEW • SPECIFICATIONS • ORDERING INTERIOR + EXTERIOR | **F080 SINGLE**

DATE	PROJECT	FIRM	TYPE

Color Filters

Red	F080-FILTER-RED
Blue	F080-FILTER-BLUE
Green	F080-FILTER-GREEN
Amber	F080-FILTER-AMBER

F080 Wall Mount Arm (for use only with Wiring Option C – External Cable Bottom Exit)

Wall Mount Arm, 6 inch, Color Finish (K=Black, S=Silver, C=Custom)	F080-WMA-06-(K,S,C)
Wall Mount Arm, 12 inch, Color Finish (K=Black, S=Silver, C=Custom)	F080-WMA-12-(K,S,C)
Wall Mount Arm, 18 inch, Color Finish (K=Black, S=Silver, C=Custom)	F080-WMA-18-(K,S,C)
Wall Mount Arm, 24 inch, Color Finish (K=Black, S=Silver, C=Custom)	F080-WMA-24-(K,S,C)

Ground Stake (for use only with Wiring Option C – External Cable Bottom Exit, not for use with multi-fixture units)

Landscape Stake, 12in (for use with F080 Single Head only, not for use with multi-fixture units)	F080-LS-1S-STK-12

DIMENSIONS

[inch]
mm

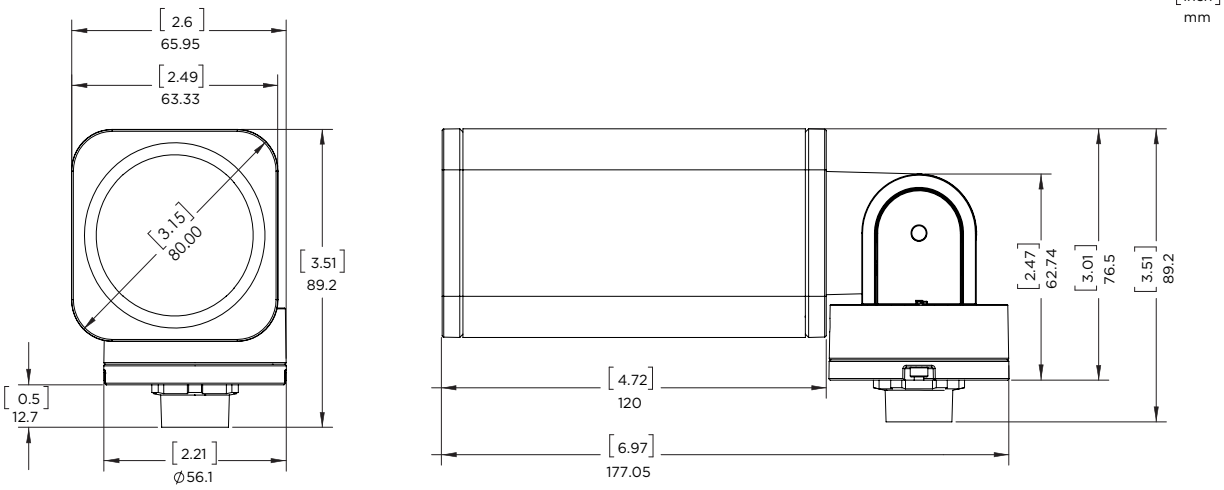

NOTE: Information on this Spec Sheet is subject to change, please visit ecosenselighting.com/rise for the most updated information.

ECOSENSE LIGHTING INC.
837 NORTH SPRING STREET
SUITE 103
LOS ANGELES, CA 90012

P • 310.496.6255
F • 310.496.6256
T • 855.632.6736
855.6.ECOSEN

SPECIFICATIONS SUBJECT TO CHANGE WITHOUT NOTICE. VISIT **ECOSENSELIGHTING**.COM FOR THE MOST CURRENT SPECIFICATIONS.
© 2017 **ECOSENSE** LIGHTING INC. ALL RIGHTS RESERVED. **ECOSENSE**, THE **ECOSENSE** LOGO, **RISE**, **TROV**, **SLIM COVE** AND **ECOSPEC** ARE REGISTERED TRADEMARKS OF **ECOSENSE** LIGHTING INC.
FREEDOM TO CREATE™

ECOSENSELIGHTING.COM

20170614

ECOSENSE® RISE™

DATE	PROJECT	FIRM	TYPE

WIRING GUIDE

RISE is and exterior rated (IP66) fixture that is available in three different wiring options:

Flying Leads - Internal Cable
(UL + CE Rated)

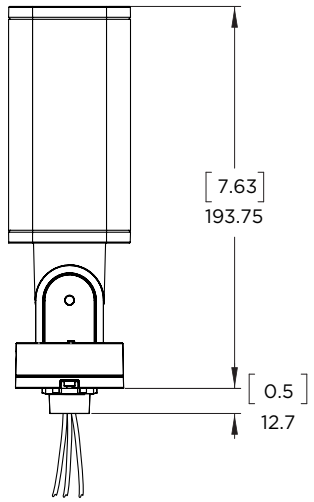

- For use with standard junction boxes
- 1/2" NPT Taper, Cable Length is 19"
- Compatible with EcoSense Canopy junction Box Cover
- 18 AWG Stranded Copper Cable - 3 Conductors

External Cable Side Exit
(UL + CE Rated)

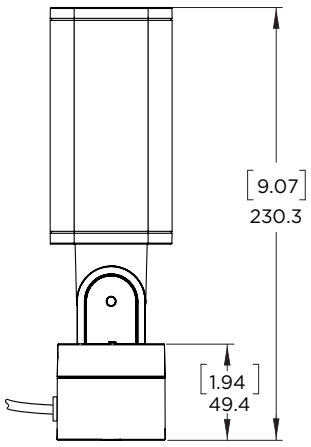

- For use when external, exterior rated cable is required to run to remote junction box or mains
- Cable exits the side of the base
- Comes with a Surface Mount Plate, for mounting direct to surface
- Cable Length is 10' (3.05m)

External Cable Bottom Exit
(UL + CE Rated)

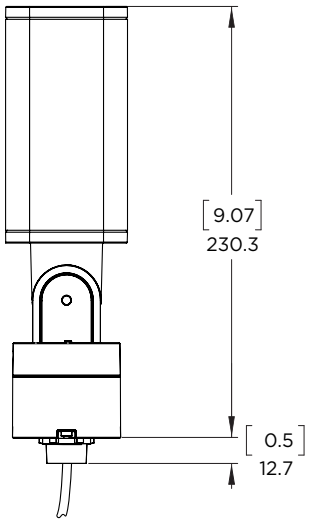

- For use when external, exterior rated cable is required to run to remote junction box or mains
- Cable exits the bottom for use with various accessories such as Wall Mount Arm and Ground Stake
- 1/2" NPT taper for mounting
- Comes with a Surface Mount Plate, for mounting direct to surface
- Cable Length is 10' (3.05m)

NOTE: Information on this Spec Sheet is subject to change, please visit ecosenselighting.com/rise for the most updated information.

ECOSENSE LIGHTING INC.
837 NORTH SPRING STREET
SUITE 103
LOS ANGELES, CA 90012

P • 310.496.6255
F • 310.496.6256
T • 855.632.6736
855.6.ECOSEN

SPECIFICATIONS SUBJECT TO CHANGE WITHOUT NOTICE. VISIT **ECOSENSELIGHTING**.COM FOR THE MOST CURRENT SPECIFICATIONS.
© 2017 **ECOSENSE** LIGHTING INC. ALL RIGHTS RESERVED. **ECOSENSE**, THE **ECOSENSE** LOGO, **RISE**, **TROV**, **SLIM COVE** AND **ECOSPEC** ARE REGISTERED TRADEMARKS OF **ECOSENSE** LIGHTING INC.
FREEDOM TO CREATE™

OLWX1 LED
LED Wall Luminaire

Catalog Number

Notes

Type

Hit the Tab key or mouse over the page to see all interactive elements.

Introduction

As versatile as it is efficient, the OLWX1 is designed to replace up to 250W metal halide while saving over 87% in energy costs. It combines multiple mounting options with the latest generation of LEDs for a wall pack luminaire that converts to a whole lot more. Whether you are mounting it to a recessed junction box, conduit/through wiring, as an up light, as a down light, or as a flood light – the OLWX1 has you covered.

Specifications

Width:	7-1/2" *(19 cm)*
Height:	8" *(20.3 cm)*
Depth:	3" *(7.62 cm)*
Weight:	5 lbs *(2.27kg)*

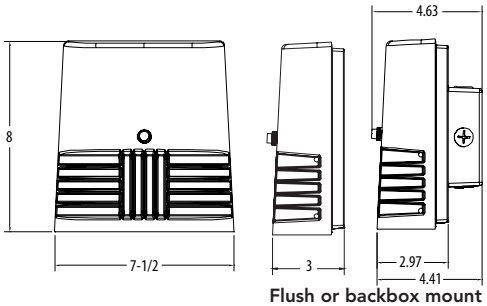

Flush or backbox mount

Ordering Information

EXAMPLE: OLWX1 LED 20W 50K

OLWX1 LED					
Series	**Performance Package**	**Color Temperature**	**Voltage**	**Controls**	**Finish**
OLWX1 LED	13W 13 watts 20W 20 watts 40W 40 watts	40K 4000 K [1] 50K 5000 K	(blank) MVOLT [2] 120 120V [3] 347 347V	(blank) None PE 120V button photocell [1,3]	(blank) Dark bronze

Accessories

Ordered and shipped separately.

OLWX1TS	Slipfitter – size 1
OLWX1YK	Yoke – size 1
OLWX1THK	Knuckle – size 1

NOTES
1 Not available with 347V option.
2 MVOLT driver operates on any line voltage from 120-277V (50/60Hz).
3 Specify 120V when ordering with photocell (PE option).

FEATURES & SPECIFICATIONS

INTENDED USE
The versatility of the OLWX1 LED combines a sleek, low-profile wall pack design and high-output LEDs to provide an energy efficient, low maintenance LED wall pack suitable for replacing up to 250W metal halide fixtures. Available flood light mounting accessories convert the OLWX1 LED into a highly efficient flood light.

OLWX1 LED is ideal for outdoor applications such as building perimeters, loading areas, driveways and sign and building flood lighting.

CONSTRUCTION
Rugged cast-aluminum housing with textured dark bronze polyester powder paint for lasting durability. Integral heat sinks optimize thermal management through conductive and convective cooling. LEDs are protected behind a glass lens. Housing is sealed against moisture and environmental contaminants (IP65).

OPTICS
High-performance LEDs behind clear glass for maximum light output. Light engines are available in 4000K and 5000K CCTs. See Lighting Facts label and photometry reports for specific fixture performance.

ELECTRICAL
Light engine consists of 1 high-efficiency Chip On Board (COB) LED with integrated circuit board mounted directly to the housing to maximize heat dissipation and promote long life (L73/100,000 hours at 25°C). Electronic drivers have a power factor >90% and THD <20% and a minimum 2.5kV surge rating. Flood light mounting accessories include an additional 6kV surge protection device.

INSTALLATION
Easily mounts to recessed junction boxes with the included wall mount bracket, or for surface mounting and conduit entry - with the included junction box with five 1/2" threaded conduit entry hubs. Flood light mounting accessories (sold separately) include knuckle, integral slipfitter and yoke mounting options. Each flood mount accessory comes with a top visor and vandal guard. Luminaire may be wall or ground mounted in downward or upward orientation.

LISTINGS
UL Listed to U.S. and Canadian safety standards for wet locations. Rated for -40° C minimum ambient. Tested in accordance with IESNA LM-79 and LM-80 standards. DesignLights Consortium® (DLC) qualified product. Not all versions of this product may be DLC qualified. Please check the DLC Qualified Products List at www.designlights.org to confirm which versions are qualified.

WARRANTY
5-year limited warranty. Complete warranty terms located at: www.acuitybrands.com/CustomerResources/Terms_and_conditions.aspx.

Note: Actual performance may differ as a result of end-user environment and application. All values are design or typical values, measured under laboratory conditions at 25°C. Specifications subject to change without notice.

LITHONIA LIGHTING
One Lithonia Way • Conyers, Georgia 30012 • Phone: 800.279.8041 • www.lithonia.com
© 2013-2017 Acuity Brands Lighting, Inc. All rights reserved.

Performance Data

Lumen Output

Lumen values are from photometric tests performed in accordance with IESNA LM-79-08. Data is considered to be representative of the configurations shown, within the tolerances allowed by Lighting Facts.

Fixture Model Number	CCT	System Watts	Lumens	LPW	B	U	G	CRI
OLWX1 LED 13W 40K	4000 K	14 W	1,271	91	1	0	0	>70
OLWX1 LED 13W 50K	5000 K	14 W	1,289	92	1	0	0	>80
OLWX1 LED 20W 40K	4000 K	20 W	2,697	135	1	0	0	>70
OLWX1 LED 20W 50K	5000 K	19 W	2,663	140	1	0	0	>70
OLWX1 LED 40W 40K	4000 K	39 W	4,027	101	2	0	0	>70
OLWX1 LED 40W 50K	5000 K	37 W	4,079	110	2	0	0	>70

Electrical Load

Fixture Model Number	Rated Power (watts)	Input current at given input voltage (amps)				
		120V	208V	240V	277V	347V
OLWX1 LED 13W 40K	14 W	0.12	0.07	0.06	0.06	0.04
OLWX1 LED 13W 50K	14 W	0.12	0.07	0.06	0.06	0.04
OLWX1 LED 20W 40K	20 W	0.20	0.12	0.10	0.09	0.06
OLWX1 LED 20W 50K	19 W	0.20	0.12	0.10	0.09	0.06
OLWX1 LED 40W 40K	39 W	0.37	0.21	0.19	0.16	0.11
OLWX1 LED 40W 50K	37 W	0.37	0.21	0.19	0.16	0.11

Lumen Ambient Temperature (LAT) Multipliers

Use these factors to determine relative lumen output for average ambient temperatures from 0-40°C (32-104°F).

	0°C	10°C	20°C	25°C	30°C	40°C
13W	1.06	1.03	1.01	1.00	0.99	0.96
20W	1.06	1.04	1.01	1.00	0.99	0.96
40W	1.07	1.04	1.01	1.00	0.99	0.96

Projected LED Lumen Maintenance

Data references the extrapolated performance projections in a **25°C ambient**, based on 10,000 hours of LED testing (tested per IESNA LM-80-08 and projected per IESNA TM-21-11).

To calculate LLF, use the lumen maintenance factor that corresponds to the desired number of operating hours below. For other lumen maintenance values, contact factory.

Operating Hours	0	25,000	50,000	100,000
OLWX1 LED 13W	1.00	0.92	0.85	0.73
OLWX1 LED 20W	1.00	0.92	0.85	0.73
OLWX1 LED 40W	1.00	0.94	0.88	0.79

Photometric Diagrams

To see complete photometric reports or download .ies files for this product, visit the Lithonia Lighting OLWX1 LED homepage. Tested in accordance with IESNA LM-79 and LM-80 standards

LEGEND

- 0.2 fc
- 0.5 fc
- 1.0 fc
- 2.0 fc

OLWX1 LED 13W 40K, Mounting height = 10'

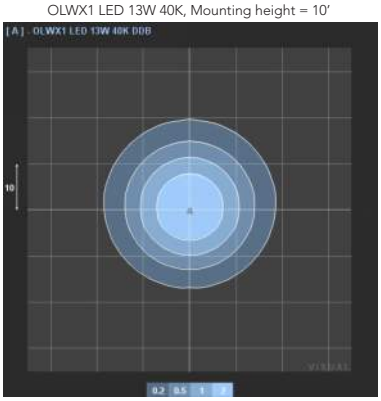

Test No. LTL22697 tested in accordance with IESNA LM-79-08.

OLWX1 LED 20W 40K, Mounting height = 12'

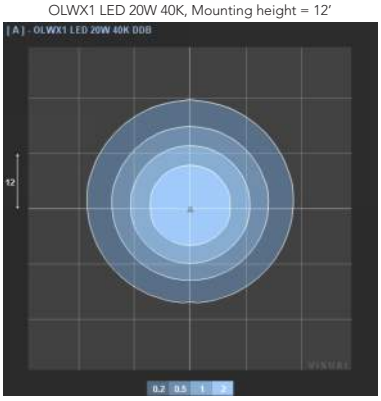

Test No. LTL22696 tested in accordance with IESNA LM-79-08.

OLWX1 LED 40W 40K, Mounting height = 15'

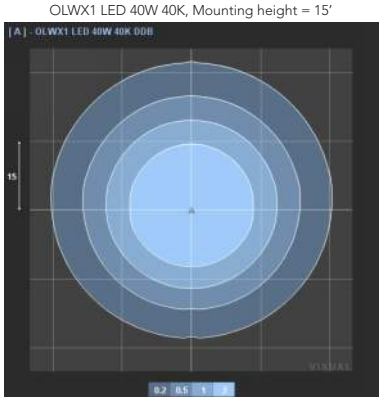

Test No. LTL22695 tested in accordance with IESNA LM-79-08.

Accessories

OLWX1TS
Slipfitter – size 1

OLWX1YK
Yoke – size 1

OLWX1THK
Knuckle – size 1

Top Visor and Vandal Guard included with accessories

© 2014 Acuity Brands Lighting, Inc. All rights reserved.

Lighting Facts Labels

OLWX1 LED 13W 40K XXX XX XXX

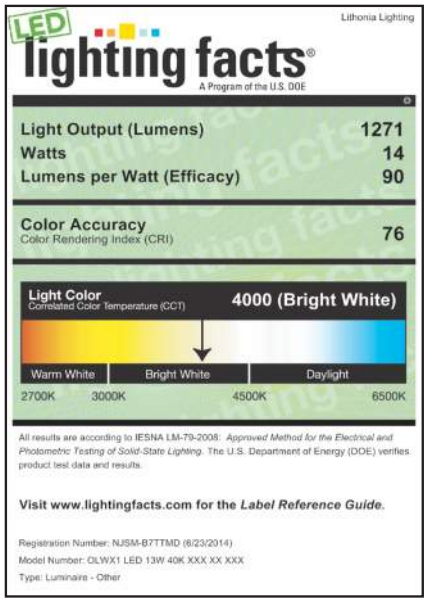

OLWX1 LED 13W 50K XXX XX XXX

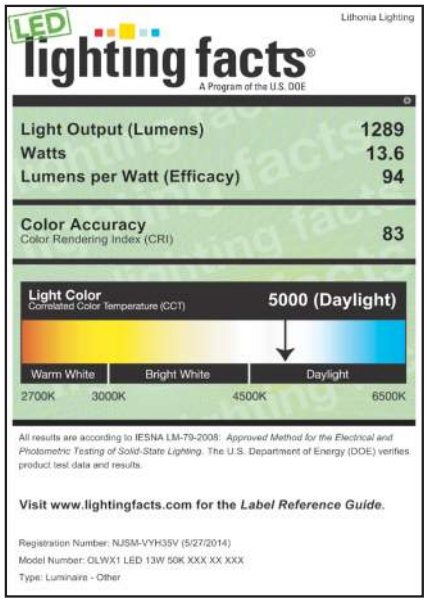

OLWX1 LED 20W 40K XXX XX XXX

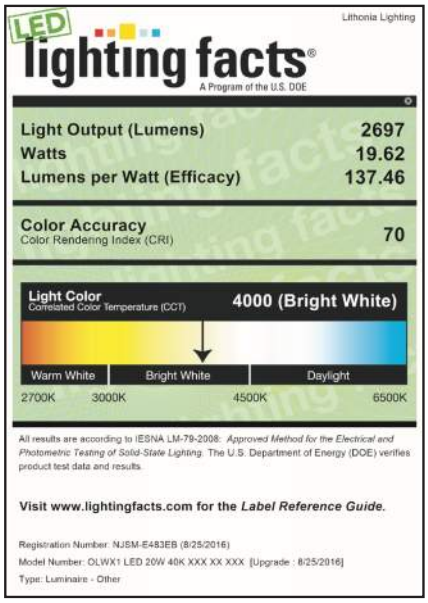

OLWX1 LED 20W 50K XXX XX XXX

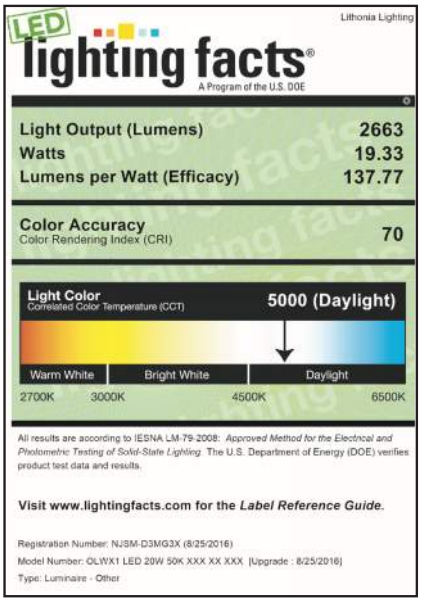

OLWX1 LED 40W 40K XXX XX XXX

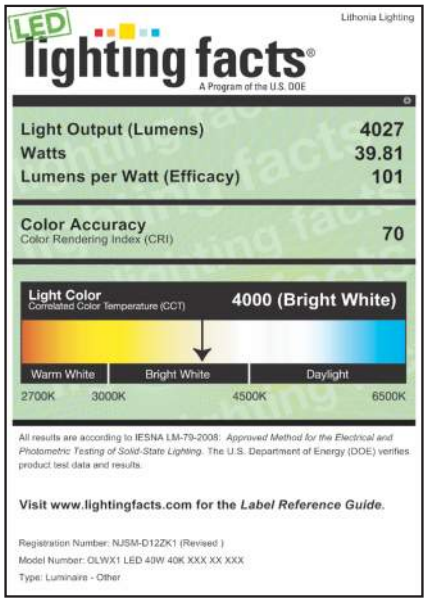

OLWX1 LED 40W 50K XXX XX XXX

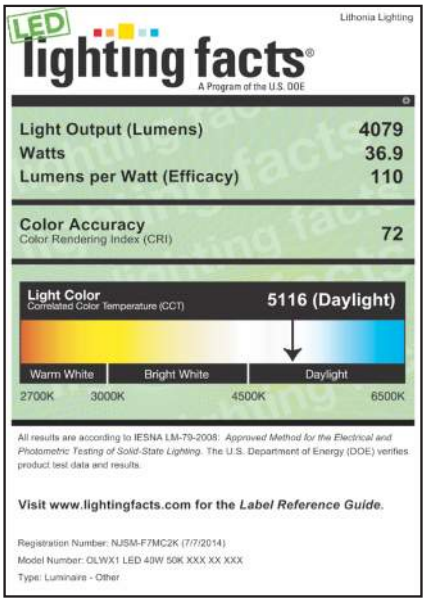

© 2014 Acuity Brands Lighting, Inc. All rights reserved.

ACL5 | SPECIFICATION GUIDE

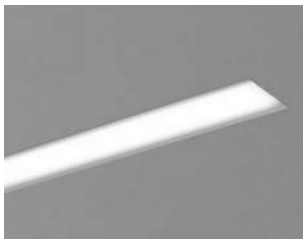

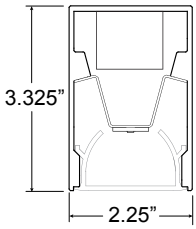

ORDERING CODE

ACL5 _____ _____ _____ _____

HE _____ _____ _____ _____

_____ _____

PROJECT INFO _____ DATE _____

TYPE _____ QUANTITY _____

PERFORMANCE AT 4000K

	NOMINAL LUMEN OUTPUT	INPUT WATTS	EFFICACY
OUTPUT			
High	921 lm/ft	9.7 W/ft	95 lm/W
Standard	460.5 lm/ft	5 W/ft	95 lm/W

Custom tuned output available from 25% to 125% of high output. Please consult factory for custom lumen output and wattage.

LIGHT LOSS FACTORS

	OUTPUT	LED CCT	CRI
BASELINE	LH	4000K	80+ CRI
	LS - 50%	3500K - 97%	90+ CRI - 80%
		3000K - 93%	

MOUNTING OPTIONS

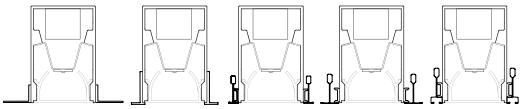

(G) | Flush Gyp / Hard Lid (XP) | Trim Flange (T) | T-Bar 9/16 (X) | T-Bar 15/16 (N) | T-Bar 9/16 Slot

ACL5				
SERIES	**LENGTH OR PATTERN TYPE**	**OUTPUT**	**LED CCT**	**VOLTAGE**
ACL5	**_** Nominal Length* **M_** Exact Length** **PL_** "L" Shape Flat*** **PLCW_** "L" Wall to Ceiling*** **PLWW_** "L" Wall to Adjacent Wall*** **PU_** "U" Shape Flat*** **PUCW_** "U" Wall to Ceiling to Wall*** **PUWW_** "U" Wall to Wall to Wall*** **PR_** Rectangle / Square*** *Specify in feet to the nearest foot (i.e. N12) **Specify in inches to then nearest 1/8 (i.e. M180.125) ***Specify in inches to the nearest 1/8 (See Pattern Guide for details)	**LS** LED Standard Output ← G2 **LH** LED High Output ← G1 **C_** LED Custom Output* *Available from 25% to 125% of LED High Output	**30** 3000K **35** 3500K **40** 4000K	**U** Universal 120V - 277V **3** 347V

HE				
DIRECT OPTICS	**MOUNTING**	**FINISH***	**DIMMING**	**EMERGENCY**
HE HE Tech™	**G** Flush Gyp / Mud Over Flange **RG** 1" Regressed Gyp / Mud Over Flange **XP** 1/2" Trim Flange **T** T-Bar 9/16" **X** T-Bar 15/16" **N** T-Bar 9/16 Slot	**T** a•lightanium™ **W** Satin White **B** Satin Black **O_** Other** Selected by architect. *Only on RG and XP mounting types **Specify RAL#	**D** Standard 0-10 dimming* **D1** Lutron Eco H series (LDE1) **D3** Other Dimming** *Dimming to 1% stated for standard 0-10v dimming **Specify model/series	**EC** Emergency - circuited **E_** Emergency - battery *(1) ILB-SL-CP12 (1200lm for 90min). Specify desired quantity of batteries. Not available on fixtures < 4' length. Not available for 347V.

SENSORS	**OPTIONS**
O Occupancy Sensor* **P** Photocell / Daylight Sensor** **OP** Occupancy & Daylight Sensor *Wattstopper FS-205 (Ø1") **Wattstopper FD-301 wired for daylight harvesting. Requires 0-10v dimming.	**M** Multi-Circuit* **N** New York City Code **K** Natatorium Application** **Q** Wet Location*** ← G1 **CRI** 90+ CRI **CP** Chicago Plenum **MRI** MRI *Submit multi-circuiting requirements **Not available with aircraft cable ***Wet location, see guide and contact Design Assist

LEDGE – model: WS-W14

LED Outdoor Sconce Luminiare

MODERN FORMS
A WAC LIGHTING COMPANY

Fixture Type:

Catalog Number:

Project:

Location:

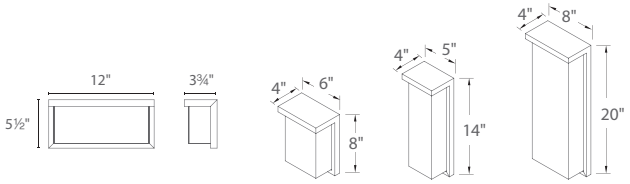

PRODUCT DESCRIPTION

A luminous architectural profile and superior construction make this sconce appropriate for transitional and contemporary interiors or exteriors. Mitered silk-screened glass encases a maximum number of LEDs engineered for optimal illumination. Three sizes allow for cohesive specifications across residential and commercial interior and exterior applications.

FEATURES

- CEC Title24 compliant for WS-W1408, WS-W1414 and WS-W1420
- ETL & cETL listed for wet locations, IP65
- CEC Title 24 Compliant
- Low profile design
- Replaceable LED module
- 200° beam angle
- 277V option available
- 80,000 hour potential life
- Color Temp: 3000K (2700K / 3500K available special order)
- CRI: 90

SPECIFICATIONS

Construction: Aluminum with white mitered glass.

Power: Transformer located in outlet box

Light Source: High output LED

Dimming: Dims to 10% with an electronic low voltage (ELV) dimmer

Mounting: Mounts directly to junction box

Finish: Brushed Aluminum (AL), Black (BK). Bronze (BZ), Graphite (GH)

Standards: ETL & cETL listed. ADA compliant.

Installation: Requires Transformer to be recessed within the junction box.

TOTAL HARMONIC DISTORTION

Model	THD
WS-W1408	*39.64%*
WS-W1412	*38.81%*
WS-W1414	*40.18%*
WS-W1420	*40.06%*

ORDER NUMBER

Model	Height	Watt	Voltage	LED Lumens	Delivered Lumens
WS-W1412	*12"*	*29W*	*120V*	*1200*	*690*
WS-W1408	*8"*	*11.5W*	*120V*	*525*	*340*
WS-W1414	*14"*	*19.5W*	*120V*	*910*	*670*
WS-W1420	*20"*	*29W*	*120V*	*1575*	*1050*

Finish	Selected by Architect
AL	*Brushed Aluminum*
BK	*Black*
BZ	*Bronze*
GH	*Graphite*

Example: **WS-W1420-AL**
For 277V special order, add an "F" before the finish: **WS-W1420F-AL**

REPLACEMENT GLASS

Model	Fixture	Description
RPL-GLA-1408-01	*WS-W1408*	*Outer Glass*
RPL-GLA-1414-01	*WS-W1414*	
RPL-GLA-1420-01	*WS-W1420*	
RPL-GLA-1412-01	*WS-W1412*	
RPL-GLA-1408-02	*WS-W1408*	*Inner Glass*
RPL-GLA-1414-02	*WS-W1414*	
RPL-GLA-1420-02	*WS-W1420*	
RPL-GLA-1412-02	*WS-W1412*	

modernforms.com
Phone (800) 526.2588
Fax (800) 526.2585

Headquarters/Eastern Distribution Center
44 Harbor Park Drive
Port Washington, NY 11050

Central Distribution Center
1600 Distribution Ct
Lithia Springs, GA 30122

Western Distribution Center
1750 Archibald Avenue
Ontario, CA 91760

WAC Lighting retains the right to modify the design of our products at any time as part of the company's continuous improvement program. JAN 2016

CHROMAPATH® ALUMINUM CHANNELS

CHROMAPATH® BUILDER DUO

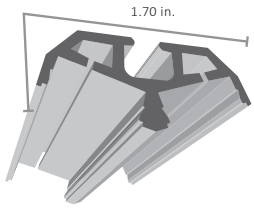

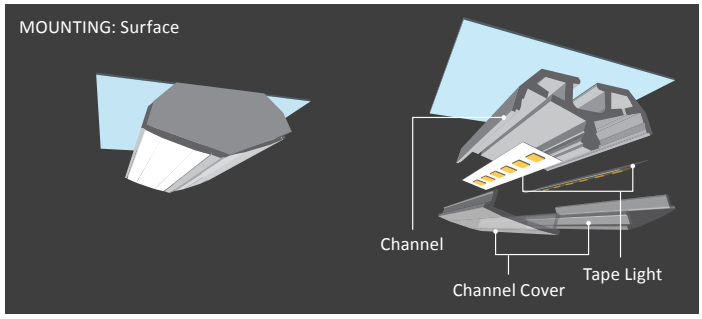

INCLUDES
End-to-end connector plugs & mounting clips

COMPATIBILITY
FLUID VIEW®
BLAZE™
ULTRA BLAZE™
VALENT®
VALENT® HD
AVENUE 24™
DAZZLE® RGB(W)

CHANNEL OPTIONS
Selected by architect.

☐ SKU ALUMINUM	☐ SKU WHITE FINISH	■ SKU BLACK FINISH	LENGTH	BUNDLE OPTION	INCLUDES PER CHANNEL
DI-CPCHA-DU48	DI-CPCHA-DU48W	DI-CPCHA-DU48B	48 in.	Single	• 4x end-to-end connectors • 2x mounting clips
DI-CPCHA-DU48-10	DI-CPCHA-DU48W-10	DI-CPCHA-DU48B-10	48 in.	Pack of 10	

CLEAR AND FROSTED COVERS

	SKU	FORM FACTOR	LENGTH	BUNDLES
FROSTED COVER: Protects LED tape light and slightly softens light. Please note there is an average warm shift in Kelvin of 35K and an average 28% decrease in delivered lumens.	DI-CPCHC-FR48	Frosted Cover	48 in.	Single
	DI-CPCHC-FR48-10	Frosted Cover	48 in.	Pack of 10
CLEAR COVER: Protects the LED tape light with no visible color shift or change in delivered lumens.	DI-CPCHC-CL48	Clear Cover	48 in.	Single
	DI-CPCHC-CL48-10	Clear Cover	48 in.	Pack of 10

PRODUCT IMAGE	FORM FACTOR	☐ SKU ALUMINUM	☐ SKU WHITE FINISH	■ SKU BLACK FINISH
	DUO Standard 5 extra sets	DI-CPEC-DU	DI-CPEC-DUW	DI-CPEC-DUB

MOUNTING OPTIONS

MOUNTING CLIPS

SKU	DESCRIPTION
DI-CPMC2-SCR4	Pack of 2 Clips / 4 screws
DI-1630-20	Pack of 20 Clips / 40 screws

VERTICAL MOUNTING BRACKETS

SKU	DESCRIPTION
DI-1913	Pack of 2

END-TO-END CONNECTOR PLUGS

SKU	DESCRIPTION
DI-1631-10	Pack of 10

ADJUSTABLE ANGLE MOUNTING

ROTATING MOUNTING CLIPS

Includes: Pair of clips with screws

☐ ALUMINUM	☐ WHITE	■ BLACK
DI-CPCH-RC-BA	DI-CPCH-RC-WH	DI-CPCH-RC-BL

diode led®
a division of elemental LED

HYDROLUME® 24V LED Strip Light

SPECIFICATION SHEET

ACTUAL SIZE

HYDROLUME® is designed for harsh or wet* environments, and is completely UV, saltwater, and chlorine resistant. Add brilliant lighting virtually anywhere using a lighting solution durable enough to last in extreme environments, yet elegant enough for many other applications. Designed using patented technology, each section is custom assembled to your exact specifications in our California Operations Center to arrive prefinished and ready to install.

***WARNING: NOT FOR USE IN SUBMERSIBLE APPLICATIONS**

ITEM #	CCT (KELVIN)	CRI	LUMENS[1] / FT.
DI-24V-HL35-80-** (STD)	3500K	80	75
DI-24V-HL65-72-** (STD)	6500K	72	82
DI-24V-HLP27-78-** (PLUS)	2700K	78	155
DI-24V-HLP35-80-** (PLUS)	3500K	80	165
DI-24V-HLP65-72-** (PLUS)	6500K	72	144

HYDROLUME is sold in custom lengths up to 81.5 feet (STD) or 32.6 feet (PLUS) in 7.08 inch increments.
Footnote 1 see page 2.

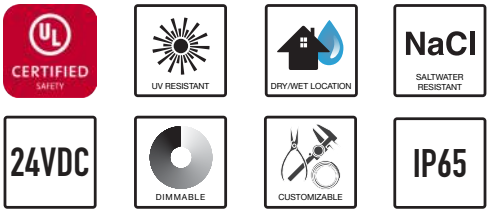

FEATURES

- UL Listed 2108 certification allows for installations indoor, outdoor, and in wet locations (not submerged in water)
- Safe for saltwater and chlorine treated installations.
- Resistant to direct sunlight and UV radiation

QUICK SPECS

Voltage	24VDC
Wattage	1.13W/ft. HYDROLUME 2.04W/ft. HYDROLUME PLUS
Max. Run[2]	81.5 ft. HYDROLUME 32.6 ft. HYDROLUME PLUS
Dimensions	0.47 x 0.22 in. (W x H) (Strip Only), 0.75 x 0.48 in. (W x H) (w/ Endcap)
Dimmable	Yes
Field Cuttable	No
LED Chips	10/ft.
Environment	Outdoor / wet location / IP65
Certification	UL Listed 2108
Warranty	5-Year Warranty

Visit the product page at www.DiodeLED.com for installation guides, .IES files, voltage drop charts, and LM-79 reports.

Item #

Project

© 2017 Elemental LED, Inc. All rights reserved.
Specifications are subject to change without notice.
Toll Free: 877.817.6028 | Fax: 415.592.1596 | www.DiodeLED.com | info@DiodeLED.com

SPECIFICATIONS

- Input: 24VDC Constant Voltage
- LED Chip Type: CREE 3228 SMD Chip (HL), CREE 3535 SMD Chip (HLP)
- LED Chip Beam Angle: 120°
- Material: UV/IR protected TPU
- Luminous Efficacy[3] (lm/w): 66~103
- Mounting (sold separately): Stake Bracket, Mounting Bracket, and Mounting Channel
- Connections: Custom length hard-wire lead ranging from 2 in. ~ 45 ft. (HL) and 1 ~ 45 ft. (HLP) Leads: 18/2 AWG UL STJW Hard-Usage Cord
- Ambient Temp[4]:-4 ~ 122°F (-20 ~ 50°C)
- Operating Temp[5]:-4 ~ 176°F (-20 ~ 80°C)
- Flammability[6]: Flame retardant

COMPLIANCE & REGULATORY APPROVALS

Safety

- UL Listed 2108 Low Voltage Lighting System / Low Voltage Luminaire. UL 1598 / CSA 250.0-08, UL 8750. UL 879 / CAN/CSA-C22.2 no. 207-M89. Certified for United States and Canada. File # E469769.

Performance

- LED chip data measured in accordance to IES LM-80-08.
- Photometric & Colorimetry data measured in accordance to IES LM-79-08, in Elemental LED's Innovation Lab.

ADDITIONAL ACCESSORIES

Accessories listed below are fully compatible with our HYDROLUME product line. Further information on these products and more accessories can be found in our latest catalog or online at www.DiodeLED.com.

HYDROLUME Mounting Bracket
DI-HL-MTBR

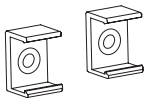

HYDROLUME Stake Bracket
DI-HL-STBR

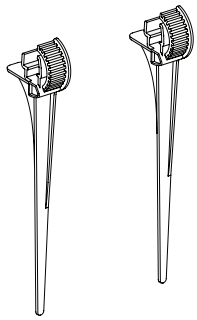

HYDROLUME Mounting Channel (Length: 39.4in.)
DI-HL-MTCH

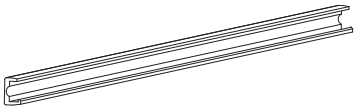

COMPATIBLE DRIVERS

Additional information on compatible Drivers can be found on page 4-5 or on the Diode LED web site at: www.DiodeLED.com.

1. Lumen value measured in accordance to IES LM-80-08. LED chips have a luminous flux range with a tolerance of +/- 5%. Each test was performed with a 14.16 in. segment of HYDROLUME (2x 7.08 sections).
2. Each maximum run requires a dedicated power feed from the driver. Do not extend beyond the recommended maximum run length.
3. Actual efficacy value is dependent to specified LED driver (power supply). An estimated efficacy value can be calculated as follows: Lumen value divided by average power consumption per foot.
4. Do not install product in an environment outside the listed ambient temperature. Exceeding the maximum ambient temperature may damage LED chips, reduce the total lamp life, lumen output, and/or adversely impact color consistency.
5. Operating temperature is measured according to the minimum and maximum ambient temperature environment.
6. This product has been tested and passed glow-wire flammability tests (GWFI index) at 650°C/1200°F, providing an extra level of safety for common areas, hospitality, and areas of high risk fire.

MECHANICAL DIAGRAMS

UOM: mm [in.]

HYDROLUME / HYDROLUME PLUS

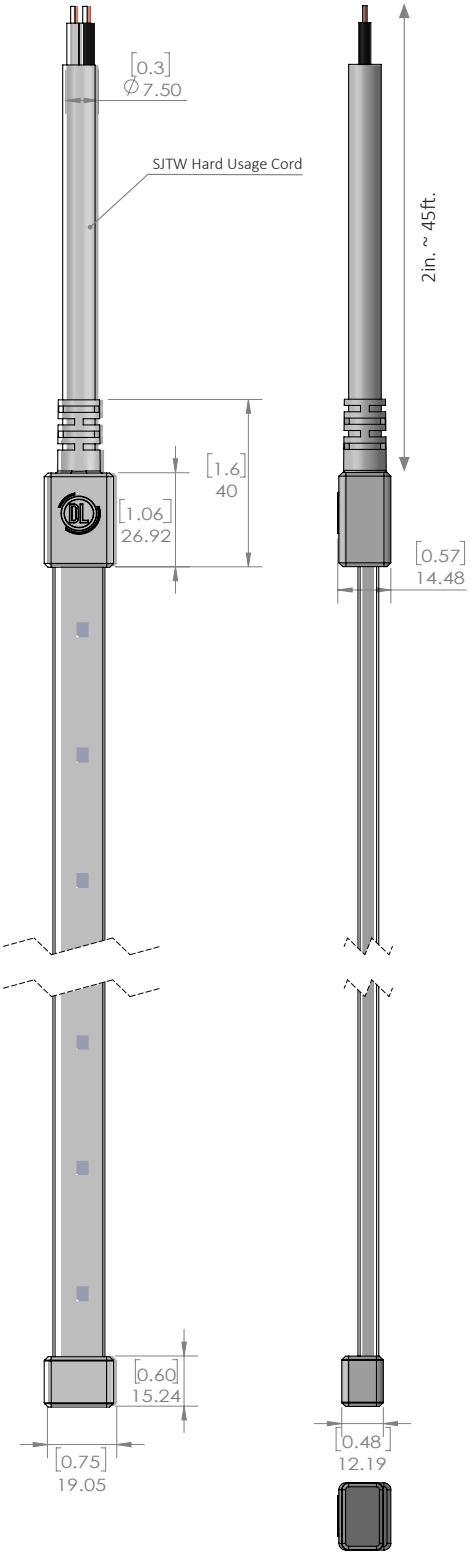

HYDROLUME MOUNTING CHANNEL

Length: 39.4in.

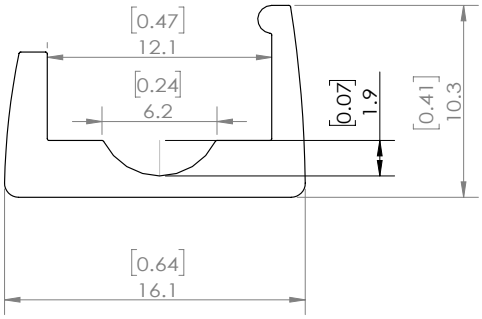

HYDROLUME MOUNTING BRACKET

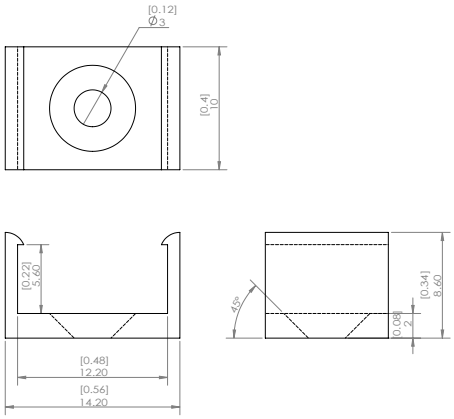

HYDROLUME STAKE BRACKET

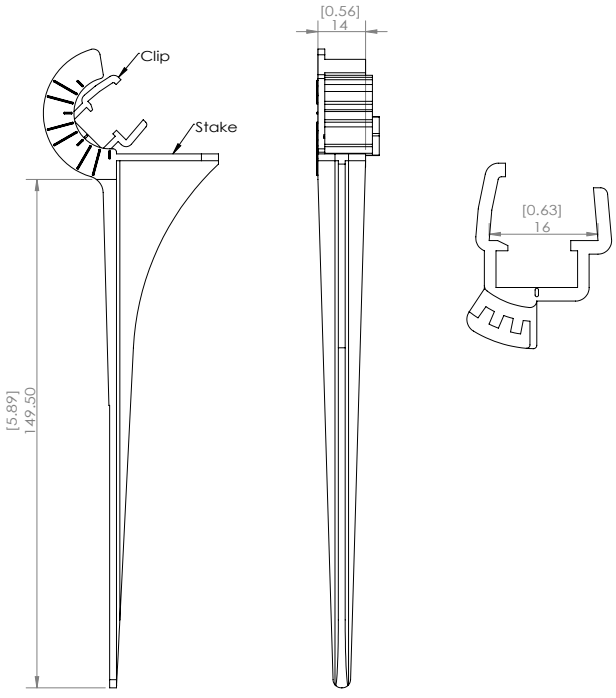

LED DRIVERS (Required)

The following Listed LED Drivers are recommended for compatibility and to meet NEC code when installed according to specifications. For additional LED Driver options see Diode LED's product page at: https://www.diodeled.com/products/led-power-supplies.html

SWITCHEX® DRIVER + DIMMER SWITCH

SWITCHEX combines an LED driver and LED dimmer switch into a single integrated unit. Fits into standard switch boxes.

	Voltage Output		Power Output
DI	24V	SE	60W

60W - 60 Watts
100W - 100 Watts

SKU	L - LENGTH	W - WIDTH	H - HEIGHT
DI-24V-SE-60W	1.40 in.	2.10 in.	4.10 in.
DI-24V-SE-100W	1.40 in.	2.10 in.	4.10 in.

Fits in Standard Switch Box

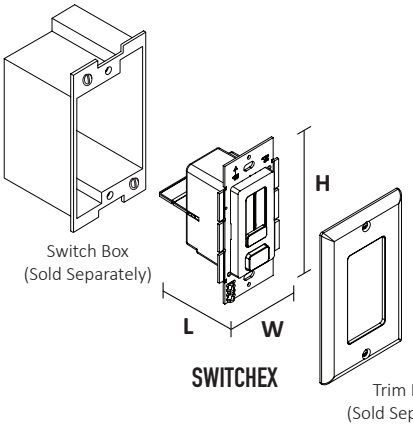

LO-PRO® JUNCTION BOX & DRIVER COMBO - 24V CONSTANT VOLTAGE LED DRIVER

Use Constant Voltage Drivers to power your lighting system. Compatible with Standard 120VAC On/Off Switches, REIGN® Low Voltage Dimmers, TOUCHDIAL™ Control System, DMX Decoders, and PWM Controls.

	Voltage & Power Output
DI	0970

0970-LPS - 24V 35W
CV-MW24V60W-277-LPS - 24V 60W
CV-MW24V90W-277-LPS - 24V 90W
0954-LPL - 24V 96W

SKU	L - LENGTH	W - WIDTH	H - HEIGHT
DI-0970-LPS	11.25 in.	3.75 in.	1.90 in.
DI-CV-MW24V60W-277-LPS	11.25 in.	3.75 in.	1.90 in.
DI-CV-MW24V90W-277-LPS	11.25 in.	3.75 in.	1.90 in.
DI-0954-LPL	13.5 in.	4.5 in.	2.37 in.

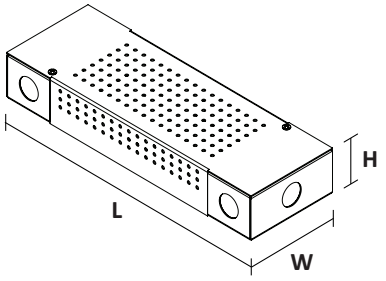

LO-PRO® JUNCTION BOX & DRIVER COMBO - 24V COMMERCIAL GRADE 0-10V LED DIMMABLE DRIVER

Compatible with 0-10V controls and dimming systems.

	Voltage & Power Output		
DI-DM	MW24V60W	0-10V	LPS

MW24V60W - 24V 60W
MW24V90W - 24V 90W

LPS - Lo-Pro Small
LPL - Lo-Pro Large

SKU	L - LENGTH	W - WIDTH	H - HEIGHT
DI-DM-MW-24V60W-0-10V-LPS	11.25 in.	3.75 in.	1.90 in.
DI-DM-MW-24V90W-0-10V-LPL	13.5 in.	4.5 in.	2.37 in.

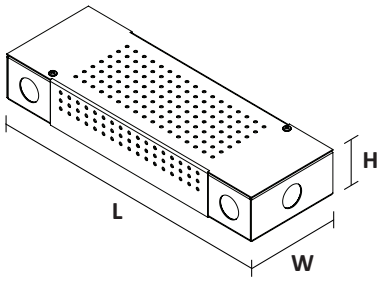

LED DRIVERS CONT. (Required)

The following Listed LED Drivers are recommended for compatibility and to meet NEC code when installed according to specifications. For additional LED Driver options see Diode LED's product page at: https://www.diodeled.com/products/led-power-supplies.html

OMNIDRIVE® 2 ELECTRONIC DIMMABLE LED DRIVER

OMNIDRIVE 2 features a zero minimum load and 100-5% dimming range. Compatible with Forward Phase and Reverse Phase Dimmers. Please see Diode LED's Compatibility List at: https://www.diodeled.com/custom/download/productFile/filename/DI-OD2-Compatibility%20List.pdf/

Voltage & Power Output

DI – **OD2** – **24V24W**

24V24W - 24V 24W
24V60W - 24V 60W
24V96W - 24V 96W
24V120W - 24V 120W
24V200W - 24V 200W

SKU	L - LENGTH	W - WIDTH	H - HEIGHT
DI-OD2-24V24W	13.75 in.	3.00 in.	1.60 in.
DI-OD2-24V60W	13.75 in.	3.00 in.	1.60 in.
DI-OD2-24V96W	15.00 in.	3.10 in.	2.40 in.
DI-OD2-24V120W	15.00 in.	3.10 in.	2.40 in.
DI-OD2-24V200W	16.10 in.	3.40 in.	2.40 in.

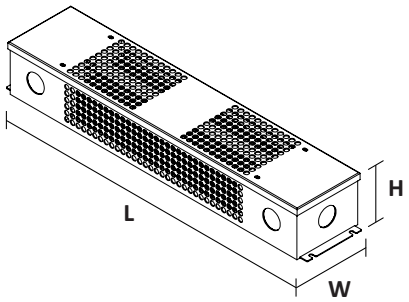

LUTRON Hi-lume 1% LED DIMMABLE DRIVER

Hi-lume 1% LED Driver has a minimum load of 5W and dims from 100-1%.

Voltage & Power Output | 3-Wire or 2-Wire Dimmers

DI-DM – **24V40W** – **L3D**

24V40W - 12V 40W

L3D - Lutron Hi-lume 1% EcoSystem /3-WireVoltage LED Driver
LTE - Lutron Hi-lume 1% 2-Wire LED Driver (120V Forward Phase Only)

SKU	L - LENGTH	W - WIDTH	H - HEIGHT
DI-DM-24V40W-L3D	4.89 in.	4.00 in.	2.62 in.
DI-DM-24V40W-LTE			

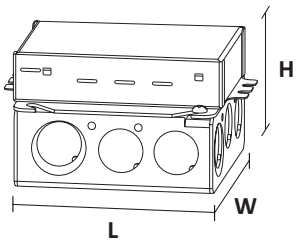

LUTRON Hi-lume Premier 0.1% LED DIMMABLE DRIVER

Hi-Lume Premier 0.1% LED Driver has a minimum load of 5W and dims from 100-0.1%.

Voltage & Power Output

DI-DM – **24V96W** – **L3D**

24V96W - 24V 96W

L3D - Lutron Hi-lume Premier 0.1% EcoSystem/3-Wire LED Driver

SKU	L - LENGTH	W - WIDTH	H - HEIGHT
DI-DM-24V96W-L3D	5.50 in.	2.20 in.	10.50 in.

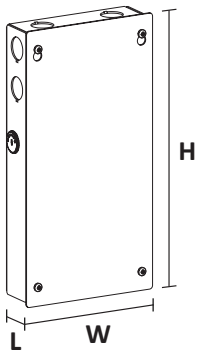

ADDITIONAL INFORMATION

- HYDROLUME LED STRIP LIGHT Installation Guide

SAFETY / WARNINGS / DISCLOSURES

1. Install in accordance with national and local electrical code regulations.
2. This product is intended to be installed and serviced by a qualified, licensed electrician.
3. Only install with a listed Class 2 DC Constant Voltage LED Driver.
4. Not for use in or on walls of pools, fountains, or other partially or fully submersed locations.
5. HYDROLUME is NOT rated as field-cuttable. Do not modify or disassemble product beyond instructions or this warranty will be void.
6. Actual color may vary from what is pictured above and on other print materials due to the limitations of photographic processes.
7. We reserve the right to modify and improve the design of our fixtures without prior notice. We cannot guarantee to match existing installed fixtures for subsequent orders or replacements in regards to product appearance, CCT, or lumen output.

WARRANTY

Limited Warranty

This product has a five (5) year limited warranty from the date of shipment. This warranty does not include the additional accessories referenced in this specification sheet. Complete warranty details for fixtures and additional accessories are available at www.diodeled.com/limited-warranty/ within the Policies section. For warranty related questions please contact product support.

Consumer's Acknowledgment

Elemental LED, Inc. stands behind its products when they are used properly and according to our specifications. By purchasing our products, the purchaser agrees and acknowledges that lighting design, configuration and installation is a complex process, wherein seemingly minor factors or changes in layout and infield adjustments can have a significant impact on an entire system. Choosing the correct components is essential. Elemental LED is able to work with the original purchaser to make an appropriate product selection to the extent of the limited information that the customer can provide, but it is virtually impossible for Elemental LED to design a system that foresees every unknown factor. For this reason, this Warranty does not cover problems caused by improper design, configuration or installation issues. Any statement from an Elemental LED employee or agent regarding a customer's bill of goods and/or purchase order is NOT an acknowledgment that the products purchased are designed and configured correctly. The purchaser agrees and acknowledges that it is the customer's responsibility to adhere strictly to all information contained in the Product Specification Sheets.

There is often more than one way to design, configure and layout an LED lighting application properly to achieve the same lighting effect. Elemental LED strongly recommends that licensed professionals be used in the design and installation of lighting systems that include Elemental LED products. The specifications include important information that a designer and installer should carefully review and strictly follow. Qualified designers and certified and/or licensed installers, with access to the final installation environment, customer goals, and Elemental LED product specifications can make the requisite decisions appropriate for a successful finished lighting application.

diode led®
a division of elemental LED

© 2017 Elemental LED, Inc. All rights reserved.
Specifications are subject to change without notice.
Toll Free: 877.817.6028 | Fax: 415.592.1596 | www.DiodeLED.com | info@DiodeLED.com

FORQ – model: WS-W17

LED Exterior Sconce

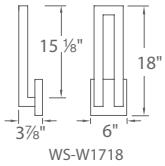

WS-W1718

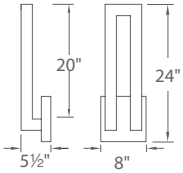

WS-W1724

Fixture Type:

Catalog Number:

Project:

Location:

PRODUCT DESCRIPTION

Tall and austere. A simple form presents from the wall behind it while enhancing the sense of space by drawing the eye to the wall. Rated for interior and exterior applications.

SPECIFICATIONS

Construction: Aluminum

Light Source: High output LED.

Finish: Black (BK), Bronze (BZ), Graphite (GH), White (WT)

Standards: ETL & cETL wet location listed IP 65. ADA compliant.

FEATURES

- ADA compliant, low profile design
- ETL & cETL wet location listed, IP 65 rated
- Aluminum construction
- Full range dimming when used with compatible dimmers*
- Transformer located in canopy
- 277V option available (special order)
- Replaceable LED modules
- 60,000 hour rated life
- Color Temp: 3000K
- CRI: 90

ORDER NUMBER

Model	Height	Watt	Voltage	LED Lumens	Delivered Lumens
WS-W1718	*18"*	*22W*	*120V*	*1876*	*790*
WS-W1724	*24"*	*33W*		*1546*	*1443*

Finish — Selected by Architect

BK	*Black*
BZ	*Bronze*
GH	*Graphite*
WT	*White*

Example: **WS-W1718-GH**
For 277V special order, add an "F" before the finish: **WS-W1718F-GH**

modernforms.com
Phone (800) 526.2588
Fax (800) 526.2585

Headquarters/Eastern Distribution Center
44 Harbor Park Drive
Port Washington, NY 11050

Central Distribution Center
1600 Distribution Ct
Lithia Springs, GA 30122

Western Distribution Center
1750 Archibald Avenue
Ontario, CA 91760

WAC Lighting retains the right to modify the design of our products at any time as part of the company's continuous improvement program. APR 2017

FEELUX®

EcoSlimLamp LED

PRODUCT FEATURES

- Seamless Illumination
- Spot Free Lens
- Line Voltage Integral Driver
- Even Illumination on Surfaces
- Easy Plug-and-Play Installation
- AC Power Driver Built In
- Round Milky Diffuser
- Non-Dimming
- Quick Ship Available*

PRODUCT SPECIFICATIONS

- Voltage: AC 120V
- Operating Temperature: 32-113°F (0-45°C)
- Lamp Life: 50,000 hrs L70
- Available Color: 2700K, 3000K, 3500K, 4000K, 6000K*
- CRI/Ra > 85
- Energy Efficiency: 75 lm/W - 5W/ft - 375lm/ft
- Degree of protection IP20
- Beam Angle: 320°
- Finish: White
- 5 year Warranty

* Pending factory availability

DIMENSIONS

Model Number	Voltage Input (V)	Power Input (W)	A inches (mm)	B inches (mm)	C inches (mm)	B' inches (mm)	C' inches (mm)
ELS5-(Color)K-120V	AC 120	5	12.5" (319)	.95" (24.3)	1.29" (32.7)	1.06" (27)	1.4" (35.5)
ELS10-(Color)K-120V	AC 120	10	22.8" (580)	.95" (24.3)	1.29" (32.7)	1.06" (27)	1.4" (35.5)
ELS15-(Color)K-120V	AC 120	15	34.65" (880)	.95" (24.3)	1.29" (32.7)	1.06" (27)	1.4" (35.5)
ELS20-(Color)K-120V	AC 120	20	46.45" (1180)	.95" (24.3)	1.29" (32.7)	1.06" (27)	1.4" (35.5)

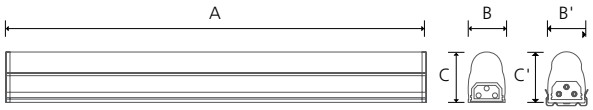

SPECIFICATION DIAGRAM

Power Options

Option 1 - Cord & Plug

Power Cord with Plug
TUNPC120/XL

Option 2 - Hardwire

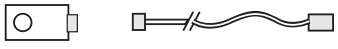

Hardwire Box
MHWB-ESL + Interface Cable

Fixture Connector Options

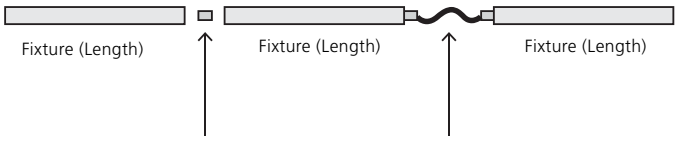

Direct Connector
TUNCPL/XL

OR

Flexible Connector
TUNPTC(X)/XL
6", 12", 24", 48", or 72"

400 WATT MAX LOAD PER POWER CORD OR HARDWIRE BOX(NON-DIMMING)

LED: **400W**

If you have any questions, please contact your local Feelux Representative. Specifications subject to change without notice. All Rights Reserved. © 2016 Feelux Lighting, Inc.

FEELUX®

EcoSlimLamp LED

FIXTURES AND ACCESSORIES DIMENSIONS

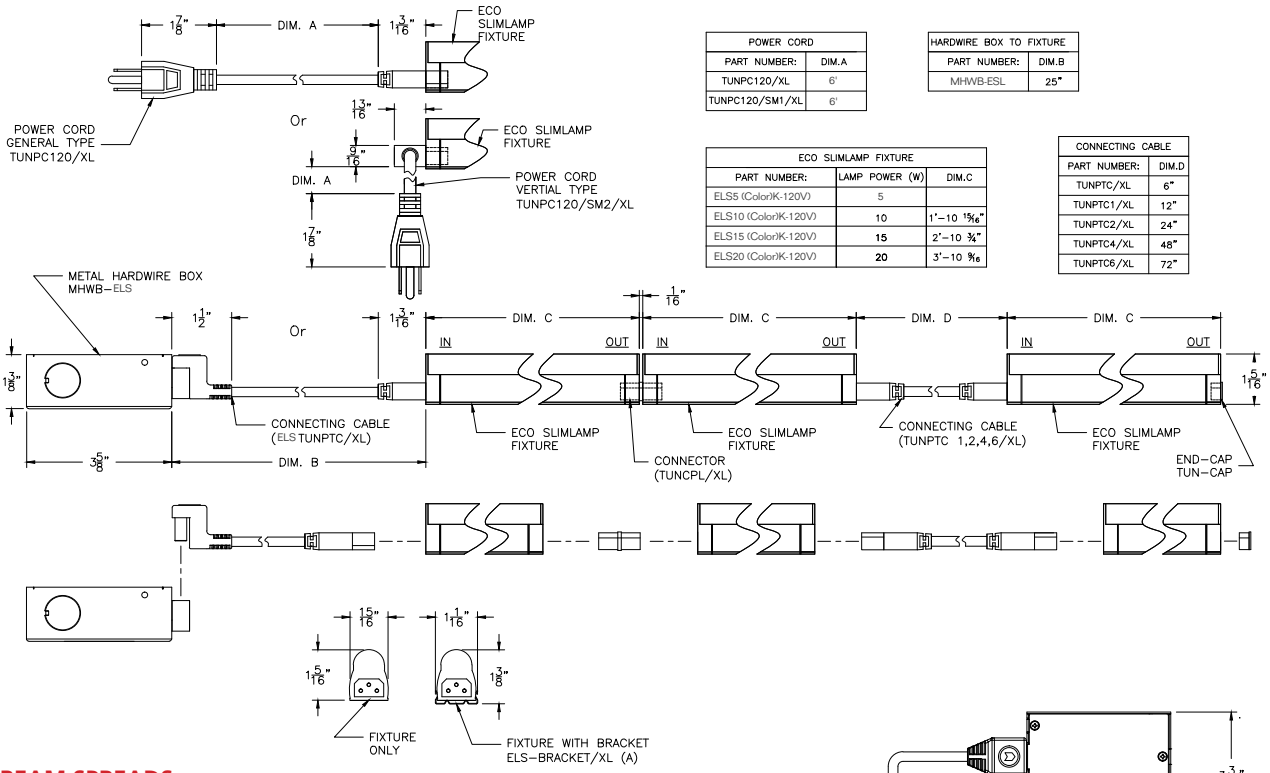

POWER CORD	
PART NUMBER:	DIM.A
TUNPC120/XL	6'
TUNPC120/SM1/XL	6'

HARDWIRE BOX TO FIXTURE	
PART NUMBER:	DIM.B
MHWB-ESL	25"

ECO SLIMLAMP FIXTURE		
PART NUMBER:	LAMP POWER (W)	DIM.C
ELS5 (Color)K-120V)	5	
ELS10 (Color)K-120V)	10	1'–10 15/16"
ELS15 (Color)K-120V)	15	2'–10 3/4"
ELS20 (Color)K-120V)	20	3'–10 9/16

CONNECTING CABLE	
PART NUMBER:	DIM.D
TUNPTC/XL	6"
TUNPTC1/XL	12"
TUNPTC2/XL	24"
TUNPTC4/XL	48"
TUNPTC6/XL	72"

BEAM SPREADS

ELS 5W 3000K (433lm (Lamp), 93.4cd (Max intensity), 5W (Power))

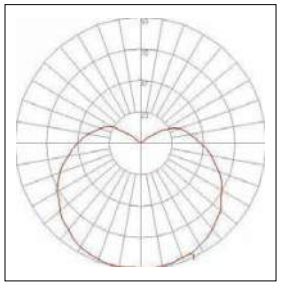

ELS 10W 3000K (886lm (Lamp), 188.7cd (Max intensity), 10W (Power))

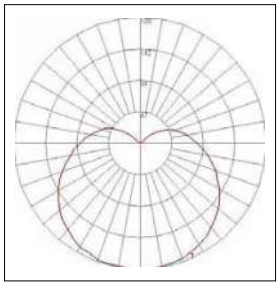

ELS 15W 3000K (1,391.3lm (Lamp), 298.6cd (Max intensity), 15W (Power))

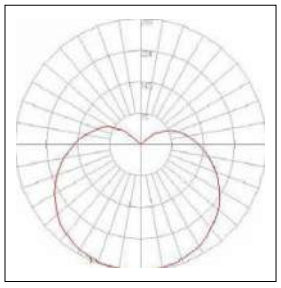

ELS 20W 3000K (1,772.5lm (Lamp), 384.7cd (Max intensity), 20W (Power)

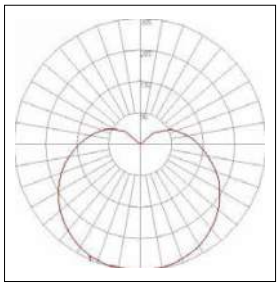

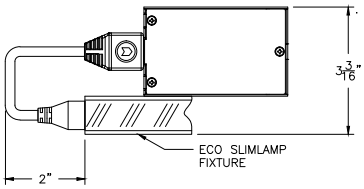

TOP VIEW
MHWB–ESL MOUNTING

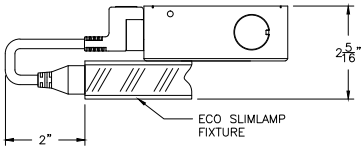

TOP VIEW
MHWB–ESL
ALTERNATE MOUNTING

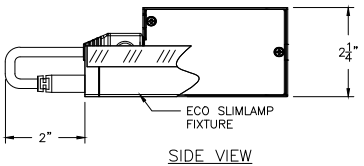

SIDE VIEW
MHWB–ESL MOUNTING

FEELUX®

EcoSlimLamp LED

COMPONENTS

Fixture
____ ELS5W-(color)K-120V
____ ELS10W-(color)K-120V
____ ELS15W-(color)K-120V
____ ELS20W-(color)K-120V

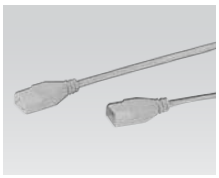

Jumper Cables
____ TUNPTC/XL (6")
____ TUNPTC1/XL (1')
____ TUNPTC2/XL (2')
____ TUNPTC4/XL (4')
____ TUNPTC6/XL (6')

Connector
____ TUNCPL/XL
Included with fixture

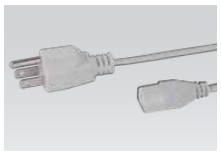

Power Cord (6')
____ TUNPC120/XL

Interface Cables
____ ESLTUNPTC/XL (6")
____ ESLTUNPTC1/XL (1')
____ ESLTUNPTC2/XL (2')
____ ESLTUNPTC4/XL (4')
____ ESLTUNPTC6/XL (6')

End Cap
____ TUN-CAP
Included with fixture

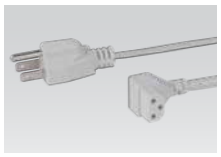

Power Cord (6')
____ TUNPC120/SM2/XL

Hard Wire Box
____ MHWB-ESL

Mounting Brackets
____ ELS-BRACKET1
Included with fixture

As shown on drawings. (Verify and coordinate with cabinets in advance).

SPECIFICATION GUIDE: NOT TO BE USED FOR ORDERING. The Specification Guide is intended solely to ensure that all options are considered.

MODEL	COLOR	LENS	MOUNTING	CONFIGURATION	RUN LENGTH	POWER	ACCESSORIES	VOLTAGE
ELS		ST			ft.		NDM	
ELS	**27K** -2700K **30K** -3000K **35K** -3500K **40K** -4000K **60K** -6000K	**ST** -Round Milky	**STD** - Flat Brackets Included	**S** -Straight **V** -Varies*	**RUN LENGTH IN FEET** 80ft max on single feed. Fill out for every run section	**CP** - Cable/Plug **HW** - Hard Wire	**NDM** Non-Dim	**120V**

***DRAWINGS AND RUN LENGTH REQUIRED**

If you have any questions, please contact your local Feelux Representative. Specifications subject to change without notice. All Rights Reserved. © 2016 Feelux Lighting, Inc.

HENNEPINMADE | modern handmade glass

PARALLEL SERIES

Cylinder

When paired with a long incandescent bulb, this tall cylinder creates a beautiful and calming light. Its blown glass shade radiates color by just having the tip of the bulb exposed through the metal top. Whether placed in a residential or commercial application, these simple and elegant cylinders work great grouped together.

DIMENSIONS	5" w x 11" h
LAMPING	40w clear bulb
LUMENS	280
VOLTAGE	120v, dimmer compatible
MOUNTING	5" round black canopy
CORD LENGTH	4' (custom available)

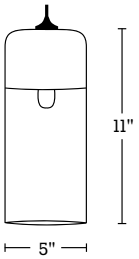

GLASS

SAPPHIRE

BRONZE

CRYSTAL

SMOKE

OLIVE

RUBY

TEA

MOUNT

DARK BRONZE

CHAMPAGNE

CLIENT	PROJECT	ROOM	PLACEMENT
PREPARED BY	COMPANY	PHONE	EMAIL
APPROVED BY	DATE	NOTES	

job name:
type:

bul.it™ LED spec sheet

material

housing
precision CNC spun .063" aluminum parabolic housing with rolled bottom edge for added strength and matte anodized finish standard. optional powder coat paint finishes.
array platform
.080" spun aluminum.
bottom lens (optional)
.125" P95 frosted acrylic concave dome with 3 finger holes. recesses slightly into fixture.
decorative ring (optional)
.125" colored acrylic ring. concave or convex reversible installation.

optics
.050" spun aluminum conical reflector finished in high reflectance (>92%) matte white powder coat.

efficiency
constant current driver operates LED consistently, regulating the current flow through it to produce the most consistent light output and efficiency. constant current driver protects LEDs from voltage fluctuations in the building power system, eliminating stress from over voltage, inrush surges, and flicker from voltage fluctuations, assuring long service life.

LED
COB array in 3000K, 3500K, or 4000K (80 cri). under normal operating conditions, the LEDs employed are rated for >36,000hrs L70 (6.8K) per IES TM-21 from LM-80 test data, and 71,000hrs L70 projected life.
white power cord is standard with other color options listed below.

driver
Roal Strato series, class 2 power unit, built-in active PFC function, universal input (120-277 vac), 10% minimum dimming level, PF >80, protections include short circuit, over current, over voltage and over temperature. wired from factory for 0-10v dimming. (8" dia)

integral Thomas Research LED-40W series, class 2 power unit, universal input (120-277 vac), 10% minimum dimming level, PF >.90, THD <20% at full load, >418khrs MTBF, protections include short circuit, over current, over voltage.
wired for 0-10v dimming from factory. (12" dia/16" dia)

mounting
5"dia. spun steel canopy in satin white with 6ft stainless steel cable tripod and field adjustable grippers that allow for exact AFF mounting heights.

finish
8" dia, select from standard powder coat paint finishes or specify RAL# for custom colors. silver anodized finish available by special order. minimum quantity required.
12" dia / 16" dia, standard is silver anodized finish. optionally, select from standard powder coat paint finishes or specify RAL# for custom colors.

emergency
emergency not available. if required, recommend use of inverter (by other).

catalog number

size

P3308
8"dia X 8.7 5"ht

see page 2 for info on P3312 and P3316

LED array

30LO	3000K
30HI	3000K
35LO	3500K
35HI	3500K
40LO	4000K
40HI	4000K

painted finishes

AP	anodized paint
BR	brick red
BU	blue
BZ	bronze
CP	champagne
MB	military blue
MN	mint
MW	matte white
OR	orange
RD	red
SB	satin black
SS	satin silver
TG	textured gray
TW	textured white
YO	yellow

premium finish

RAL	specify RAL#
AN	silver anodized*

*min. order required

options

BKPC	Black power cord and canopy
SBPC	Silver braid power cord and white canopy
BL	Bottom lens
DRA	amber decorative ring
DRB	blue decorative ring
DRF	frost decorative ring
DRG	green decorative ring
DRR	red decorative ring
DRY	yellow decorative ring

c UL us DRY / DAMP

made in the usa!

© 2017
rev. 7/31/2017

job name:
type:

bul.it™ LED spec sheet

catalog number

size

P3312
12"dia X 12"ht

P3316
16"dia X 15"ht

LED array

30LO 3000K
30HI 3000K
35LO 3500K
35HI 3500K
40LO 4000K
40HI 4000K

standard finish

AN silver anodized

painted finishes

BR brick red
BU blue
BZ bronze
CP champagne
MB military blue
MN mint
MW matte white
OR orange
RD red
SB satin black
SS satin silver
TG textured gray
TW textured white
YO yellow

premium finish

RAL specify RAL#

Selected by architect.

options

BKPC Black power cord and canopy
SBPC Silver braid power cord and white canopy
BL Bottom lens
DRA amber decorative ring
DRB blue decorative ring
DRF frost decorative ring
DRG green decorative ring
DRR red decorative ring
DRY yellow decorative ring

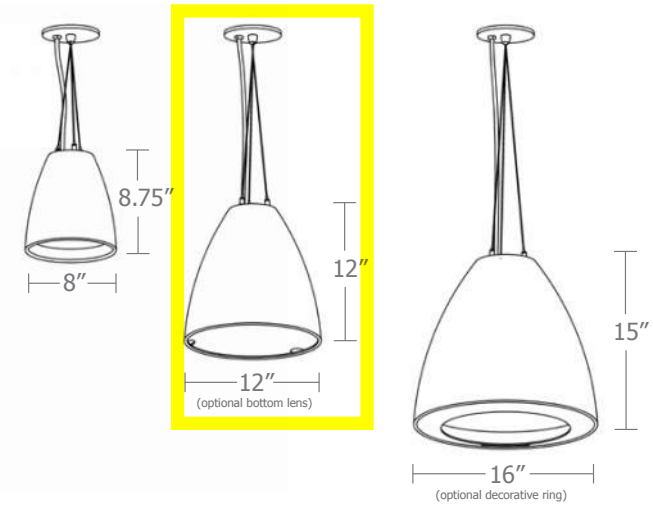

c UL us DRY / DAMP

made in the usa!

impact

© 2017
rev. 7/31/2017

bul.it™ LED spec sheet

Cat No	Delivered Lumens*	Watts 120V	Watts 277V	Amps 120V	Amps 277V
P3308 LO		17	17	.14	.06
4000K	1100				
3500K	1100				
3000K	1100				
P3308 HI		25	25	.21	.09
4000K	2200				
3500K	2200				
3000K	2200				

*preliminary delivered lumens

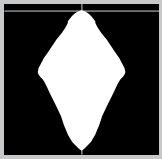

18609
P3312-40HI

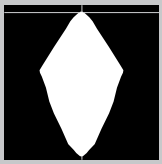

18611
P3316-40HI

Cat No	Delivered Lumens	Watts 120V	Watts 277V	Amps 120V	Amps 277V
P3312 LO		38	38	0.32	0.14
4000K	2770				
3500K	2597				
3000K	2073				
P3312 HI		45	45	0.38	0.16
4000K	3304	ies file # 18609			
3500K	3098				
3000K	2473				
P3316 LO		38	38	0.32	0.14
4000K	2770				
3500K	2597				
3000K	2073				
P3316 HI		45	45	0.38	0.16
4000K	3304	ies file # 18611			
3500K	3098				
3000K	2473				

© 2017
rev. 7/31/2017

Powder Coat Paint Finishes

MW matte white

SB satin black

YO yellow 1018

TW textured white

CP champagne

RD red 3020

AP anodized paint

BZ bronze

BU blue 5017

SS satin silver

BR brick red

OR orange 2011

TG textured gray

MB military blue

MN mint 6019

For accurate color verification, actual finish samples are available upon request.

Premium Finishes

RAL#

© 2017

KIRLIN Since 1895

CATALOG #	TYPE
JOB NAME	VOLTAGE

Direct / Indirect • 9" • LED

LWR-09496-3500L
LWR-09496-2500L

Up to 60,000 Hour Life • Wet Location
LM-80 Qualified • LM-79 Certified Photometry

Specifications

Delivered System Performance*
- Lumen Series: **MUST SPECIFY**
  -3500L: 3500 nominal lumens (42W) direct; 2500 nominal lumens (35W) indirect.
  -2500L: 2500 nominal lumens (35W) direct; 2500 nominal lumens (35W) indirect.
- Distribution: ~~WFL standard.~~ Modded for narrow flood.
- Color temperature: 3500°K st
  Optional: -27K, -30K or -41K.
- CRI: 80+ standard. Optional: -HC (90+).
- 60,000 hour life (L70).
- Fully sustainable: removable for servicing.

Thermal Management System
- All aluminum proprietary heat sink, components and housing maximize cool operation and long life while minimizing maintenance.

LED Power Supply - INTERNAL
- Suitable for outdoor / indoor use: -30°C (-22°F) to 60°C (140°F).
- 120-277V / 50-60Hz standard. Load insensitive.
- **0-10V CCR dimming standard. (100-10%)**

Trim Assembly - Direct Position
- Seamless tapered aluminum self-flanged trim with white finish.
- Regressed tempered prismatic spread lens.

WeatherCap
- Indirect position. Prismatic glass lens. Not provided with Option -PM (pendant) version.

Aluminum Housing
- Seamless white acrylic enameled with wall bracket. Rustproof: Exceeds 1000 hour ASTM 5% salt spray test.
- Interlocking flare trim.
- No visible hardware.
- Cool operation: Extends life of all components.
- Fully sustainable: Entire luminaire, including LED light engine, easily visible and serviced through aperture.

Installation
- Wall bracket extrusion assembled to housing. Wall plate included, for recessed outlet box.
- Mounting hardware included.
- Indoor or outdoor.

UL, C-UL (Canada) Listings
- Wet, damp or dry locations.

CE & FCC Compliance
- Meets IEC/EN 60601-1-2 electromagnetic compatibility standard for medical electrical equipment.
- FCC Part 15 certified for EMI/RFI emissions.

5 Year **FIVE YEAR Limited Warranty**
- Complete standard fixture.

MUST SPECIFY		OPTIONAL	
Product Number	**Voltage**	**Options**	
LWR-09496-3500L **LWR-09496-2500L**	**-120** (120 volts) **-277** (277 volts) **-97** (Specify other)	See "Options" below	**Ordering Example:** **LWR-09496-3500L-120**-30K-94

Options

Input Power: SPECIFY
-120 120V (50-60Hz) input.
-277 277V (50-60Hz) input.
-97 Specify other voltage. Consult factory.

LED Power Supply
-29 **Two wire** full range (100-1%) PWM dimming instead (Lutron). 120V only. Direct position. Not available with Option -EI. Standard wall bracket mount only; consult factory for availability and pricing.
-39 **Three wire** full range (100-1%) PWM dimming instead (Lutron). Direct position. Standard wall bracket mount only; consult factory for availability and pricing.
-D1 0-10V 1.0% dimming instead.
-D2 0-10V 0.1% dimming instead.
-EI Remote emergency inverter for 50% of rated lumens for -3500L (direct position) or 100% for -2500L (direct position). Run time: 90+ minutes. 120 **or** 277V, 60Hz input only. Specify voltage. Not for use with Option -29, -FD or -FS.
-ERH REMOTE emergency battery pack (direct position). Delivers 1000 lumens. Run time: 90+ minutes. CEC Compliant.

Color Temperature (CCT)
-27K Color temperature 2700°K instead.
-30K Color temperature 3000°K instead.
-41K Color temperature 4100°K instead.
-HC 90+ CRI instead. 2700° or 3000°K only.

Lens and Trim (Direct Position Only)
-13 Clear poly lens below standard lens. Photometric distribution is unaffected.
-17 Prismatic high strength acrylic lens instead.
-23 Frosted microprismatic lens instead.
-94 Custom color/finish. Specify. Consult factory.
-CF Custom color filter (Rosco). Specify.
-WA White acrylic (flat) diffuser instead.

Luminaire (Housing) Finishes
-35 Silver (natural aluminum) acrylic enamel.
-37 Dark Bronze acrylic enamel.
-38 Black acrylic enamel.
-94 Custom color/finish. Specify. Consult factory.

Mounting
-87 Custom pendant length. Specify length. Use with Option -PM.
-88 Swivel canopy for sloped ceilings up to 40°. Use with Option -PM.
-PM Pendant mount for damp or dry locations only. 48" stem plus 4" offset (see diagram). Also see Option -87. No wet label listing.

Other
-84 Wired for two circuits. Also see Option -FD.
-99 Special modification. Consult factory.
-FD Dual In-line fusing for use with Option -84. Not for use with Option -EI.
-FS Single in-line fuse. Not for use with Option -EI.

Modded to provide flagpole mounting hardware.

KIRLIN Lighting Since 1895
The Kirlin Company
3401 EAST JEFFERSON AVENUE • DETROIT, MICHIGAN 48207-4232
(313) 259-6400 • Fax: (313) 259-3121 • www.kirlinlighting.com

LATITUDES LED

*See note next page

DUE TO OUR CONTINUING EFFORT TO IMPROVE PRODUCTS, TECHNICAL INFORMATION IS SUBJECT TO CHANGE WITHOUT NOTICE. THE KIRLIN COMPANY EXPECTS PHOTOMETRIC PERFORMANCE TO IMPROVE SIGNIFICANTLY AND FREQUENTLY AS LED SOURCE TECHNOLOGY IMPROVES.

LATITUDES LED
REV MAR 2017

LWR-09496-3500L
LWR-09496-2500L

KIRLIN Since 1895

PERFORMANCE

Dimensions

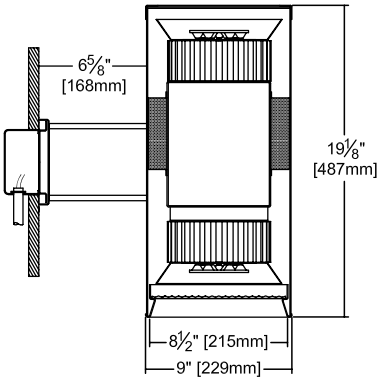

Representative View:

With optional pendant mount (Option -PM)

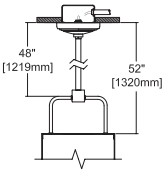

Detailed Photometry - Installed Fixture

Photometric testing done in accordance with IESNA LM-79-08

Photometry from UL Verification Services, Allentown, PA

▲Cone of Light Key (Dia. (in ft.) shown is where FC value is half the FC at nadir.)

Ft. Distance from fixture
FC Footcandles at nadir (0°)
Dia. Circle of light at 50% of FC

-3500L (3500/2500) (WFL)

Dn Lumens: 3676
Up Lumens: 2846
Dn Beam: ~52°
SC: 1.0
LPW: 83
Efficiency: 76.9%
UL Test: 11356591.35

EEE

Cone of Light▲

Dist.	FC	Dia.
6	60.2	5.8
8	33.9	7.8
10	21.7	9.7
12	15.0	11.6
14	11.1	13.6
16	8.5	15.5

Total System Watts 79.0

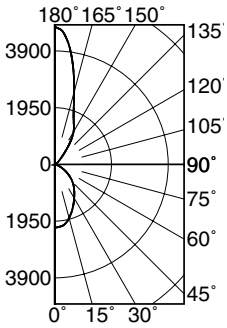

CANDLEPOWER DISTRIBUTION					
	0.0	22.5	45.0	67.5	90.0
0	2167	2167	2167	2167	2167
10	2071	2071	2071	2071	2071
30	1335	1335	1335	1335	1335
50	704	704	704	704	704
70	140	140	140	140	140
90	0	0	0	0	0
110	41	41	41	41	41
130	192	192	192	192	192
150	1294	1294	1294	1294	1294
170	3543	3543	3543	3543	3543
180	4732	4732	4732	4732	4732

-2500L (2500/2500) (WFL)

Dn Lumens: 2718
Up Lumens: 2940
Dn Beam: ~50°
SC: 0.9
LPW: 81
Efficiency: 76.1%
UL Test: 1259218

EEE

Cone of Light▲

Dist.	FC	Dia.
6	4937	5.6
8	28.0	7.5
10	17.9	9.3
12	12.4	11.2
14	9.1	13.1
16	7.0	14.9

Total System Watts 69.7

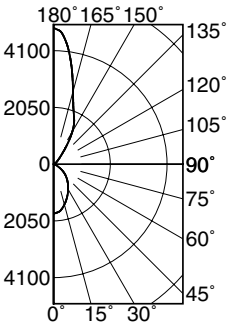

CANDLEPOWER DISTRIBUTION					
	0.0	22.5	45.0	67.5	90.0
0	1791	1791	1791	1791	1791
10	1658	1658	1658	1658	1658
30	1053	1053	1053	1053	1053
50	509	509	509	509	509
70	65	65	65	65	65
90	5	5	5	5	5
110	43	43	43	43	43
130	184	184	184	184	184
150	1356	1356	1356	1356	1356
170	3672	3672	3672	3672	3672
180	4922	4922	4922	4922	4922

LM-80 Qualified • LM-79 Certified Photometry

* LED manufacturers maintain a tolerance of ±7% on flux (lumens) and power (electrical) measurements. Kirlin photometrics are actual test data from UL Verification Services (UL) where photometry was measured from 8486 lumen (-3500L) and 7434 lumen (-2500L) light engines (within the established tolerance).

SUBMITTAL DATA

JOB NAME

TYPE VOLTAGE

CATALOG NUMBER

APPROVAL STAMP

ARRA QUALIFIED

LIMITED WARRANTY: CATALOGED KIRLIN FIXTURES ARE WARRANTIED FREE OF DEFECTS IN WORKMANSHIP OR MATERIAL FOR FIVE YEARS FROM DATE OF PURCHASE, INSTALLED TO N.E.C., IN NORMAL USE. Manufacturer at its option will replace or repair such fixture or refund the purchase price on presentation of proof of purchase. This warranty is in lieu of all other warranties expressed or implied. Seller does not warrant as to merchantability or fitness for a particular use, nor will any one statement constitute a warranty or amend this specific warranty. Abnormal use, abuse of the fixture, improper installation, or repair or modification of the fixture without prior written authorization from the manufacturer will render the warranty void.

TROY LIGHTING
Est.1963

WALL SCONCES

PRODUCT ID **B3831**

DIMENSIONAL INFORMATION	
DIAMETER	-
WIDTH	5.25"
LENGTH	-
HEIGHT	13.5"
EXTENSION	4"
ADA COMPLIANT	Yes
TCD	11.5"
MINIMUM HEIGHT	-
MAXIMUM HEIGHT	-
CHAIN LENGTH	-
STEM KIT	
CANOPY/BACKPLATE	4.75"

LAMPING INFORMATION	
(1) 60 WATT MAX 120	
BULB INCLUDED	No
SOCKET TYPE	E26 Medium Base

Contractor to provide 3500K lamp

SHADE INFORMATION	
SHADE TOP	2.25"
SHADE BOTTOM	N/A
SHADE HEIGHT	8"
SHADE ATTACHMENT	N/A
SHADE MATERIAL	N/A
SHADE COLOR	Aged Pewter

SHIPPING INFORMATION	
CARTON LENGTH	11"
CARTON WIDTH	11"
CARTON HEIGHT	9"
GROSS WEIGHT	4 lbs.
SHIPPING METHOD	UPS
QUANTITY PER CARTON	1

AVAILABLE FINISHES

JOB/LOCATION

QUANTITY

NOTES

CHROMAPATH® ALUMINUM CHANNELS

CHROMAPATH® BUILDER SLIM

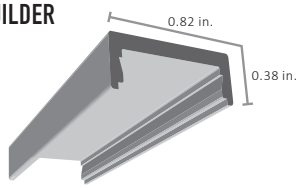

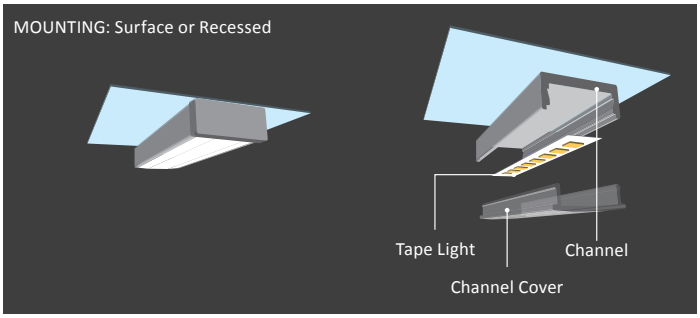

INCLUDES
SLIM channel only

COMPATIBILITY
FLUID VIEW®
BLAZE™
ULTRA BLAZE™
DOUBLE BLAZE™
VALENT®
VALENT® HD
VALENT® X
AVENUE 24™
DAZZLE® RGB(W)

CHANNEL OPTIONS
Selected by architect.

☐ SKU ALUMINUM	☐ SKU WHITE FINISH	■ SKU BLACK FINISH	LENGTH	BUNDLE OPTION
DI-CPCHA-SL48	DI-CPCHA-SL48W	DI-CPCHA-SL48B	48 in.	Single
DI-CPCHA-SL48-10	DI-CPCHA-SL48W-10	DI-CPCHA-SL48B-10	48 in.	Pack of 10
DI-CPCHA-SL96	DI-CPCHA-SL96W	DI-CPCHA-SL96B	96 in.	Single
DI-CPCHA-SL96-10	DI-CPCHA-SL96W-10	DI-CPCHA-SL96B-10	96 in.	Pack of 10

PREMIUM DIFFUSION COVER AND END-CAP

PRODUCT INFORMATION

PREMIUM DIFFUSION COVER (PD):
The ultimate in total diffusion for uninterrupted continuous LED light output.
Note: warm shift in Kelvin of 75K and an average 24% decrease in delivered lumens.
Refer to install guide for optimal performance guidelines.

SKU	FORM FACTOR	LENGTH	BUNDLES
DI-CPCHC-PD48	PD Cover	48 in.	Single
DI-CPCHC-PD48-10	PD Cover	48 in.	Pack of 10
DI-CPCHC-PD96	PD Cover	96 in.	Single
DI-CPCHC-PD96-10	PD Cover	96 in.	Pack of 10

PRODUCT IMAGE	FORM FACTOR
	SLIM Premium Diffusion End-Cap 5 extra sets

☐ SKU ALUMINUM	☐ SKU WHITE FINISH	■ SKU BLACK FINISH
DI-CPEC-SLPD	DI-CPEC-SLPDW	DI-CPEC-SLPDB

STANDARD COVERS FROSTED / CLEAR AND END-CAPS

PRODUCT INFORMATION

FROSTED COVER:
Protects LED tape light and slightly softens light.
Note: Average warm shift in Kelvin of 35K and average 28% decrease in delivered lumens.

CLEAR COVER:
Protects the LED tape light with no visible color shift or change in delivered lumens.

SKU	FORM FACTOR	LENGTH	BUNDLES
DI-CPCHC-FR48	Frosted Cover	48 in.	Single
DI-CPCHC-FR48-10	Frosted Cover	48 in.	Pack of 10
DI-CPCHC-FR96	Frosted Cover	96 in.	Single
DI-CPCHC-FR96-10	Frosted Cover	96 in.	Pack of 10
DI-CPCHC-CL48	Clear Cover	48 in.	Single
DI-CPCHC-CL48-10	Clear Cover	48 in.	Pack of 10
DI-CPCHC-CL96	Clear Cover	96 in.	Single
DI-CPCHC-CL96-10	Clear Cover	96 in.	Pack of 10

PRODUCT IMAGE	FORM FACTOR
	SLIM Standard End-Cap 5 extra sets

☐ SKU ALUMINUM	☐ SKU WHITE FINISH	■ SKU BLACK FINISH
DI-CPEC-SL	DI-CPEC-SLW	DI-CPEC-SLB

MOUNTING OPTIONS

MOUNTING TAPE

SKU	MOUNTING OPTION
DI-1633	4ft.
DI-1634	12ft.

MOUNTING U-CLIPS

Includes: Pair of clips with screws

☐ ALUMINUM	☐ WHITE	■ BLACK
DI-CPCH-UC-BA	DI-CPCH-UC-WH	DI-CPCH-UC-BL

diode led®
a division of elemental LED

BLAZE™ 24V LED Tape Light

SPECIFICATION SHEET

Our most versatile tape light in our portfolio, BLAZE 24V LED Tape Light is perfect for accent and task lighting with its vast selection of color temperatures and exceptional lumen output. Featuring a superior 90+ CRI rating for excellent light quality and the ability to run up to 33 linear feet on a single class 2 power source, BLAZE 24V LED Tape Light is ideal for commercial and residential applications.

ITEM #	CCT (KELVIN)[1]	CRI	LUMENS[2] / FT.
DI-24V-BL24-90**	2400K	95	179
DI-24V-BL27-90**	2700K	93	197
DI-24V-BL28-90**	2850K	92	209
DI-24V-BL30-90**	3000K	97	202
DI-24V-BL33-90**	3300K	94	207
DI-24V-BL35-90**	3500K	94	207
DI-24V-BL38-90**	3800K	94	224
DI-24V-BL42-90**	4200K	93	228
DI-24V-BL44-90**	4400K	92	230
DI-24V-BL50-90**	5000K	93	226
DI-24V-BL63-90**	6300K	94	223

** - Substitute with **33** for 33 ft. spool or **100** for 100 ft. spool

Footnotes 1 & 2 see page 2.

FEATURES

- Bright task lighting
- Class 2 linear runs up to 33ft.
- 90+ CRI
- Cuttable every 2 inches
- 3M™ 55280 Adhesive backing

QUICK SPECS

Voltage	24VDC
Wattage	2.88W / ft.
Max. Run	33 ft.
Dimensions	0.31 x 0.1 in. (W x H)
Field Cuttable	~2 in. (50mm)
LED Chips	36 / ft.
Certification	UL Listed 2108
Warranty	5-Year Warranty

Visit the product page at www.DiodeLED.com for installation guides, .IES files, voltage drop charts, and LM-79 reports.

Item #

Project

© 2016 Elemental LED Inc. All rights reserved.
Specifications are subject to change without notice.
Toll Free: 877.817.6028 | Fax: 415.592.1596 | www.DiodeLED.com | info@DiodeLED.com

SPECIFICATIONS

- Input: 24VDC Constant Voltage
- Power Consumption / ft.: 2.88W / 120mA
- LED Chip Type: Epistar 3528 SMD Chip
- LED Chip Beam Angle: 120°
- LED Chips / ft.: 36
- Dimmable: Yes
- Luminous Efficacy[3] (lm/w): 62~79
- Mounting[4]: 3M™ 55280 Adhesive
- Field Cuttable: ~ 2 in. (50mm)
- Maximum Run[5]: 33 ft.
- Connections[6]: 3 ft. Female DC plug on end. 3 ft. hard-wire lead opposing end. Leads: UL 2464 20/2 AWG
- Ambient Temp[7]:-4 ~ 122°F (-20 ~ 50°C)
- Operating Temp[8]:-4 ~ 176°F (-20 ~ 80°C)
- Environment[9]: Indoor / dry location
- Dimensions: 0.31 x 0.1 in. (W x H)

COMPLIANCE & REGULATORY APPROVALS

Safety

- UL Listed 2108 Low Voltage Lighting System / Low Voltage Luminaire. UL 1598 / CSA 250.0-08, UL 8750. UL 879 / CAN/CSA-C22.2 no. 207-M89. Certified for United States and Canada. File # E469769.
- UL Listed Field Cuttable.
- UL Recognized Component - Sign Accessories. Available in UL Sign Components Manual (SAMS Manual). File # E469770.

Performance

- LED chip data measured in accordance to IES LM-80-08.
- Photometric & Colorimetry data measured in accordance to IES LM-79-08, in Elemental LED's Innovation Lab.

COMPATIBLE SWITCHES, CONTROLS, LED DRIVERS, & SYSTEM DIAGRAMS CAN BE FOUND AT www.DiodeLED.com

ADDITIONAL ACCESSORIES

Accessories listed below fully support our Tape Light product line. Further information on these products and more accessories can be found in our latest catalog or online at www.DiodeLED.com.

CLICKTIGHT® PRO Tape Light Connector

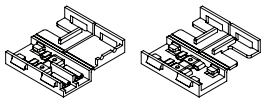

CLICKTIGHT® Tape Light Connectors

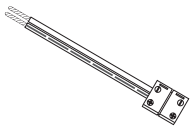

TAPEGUARD® LED Light Cover

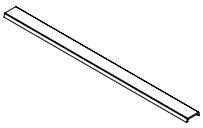

CHROMAPATH® Aluminum Channels

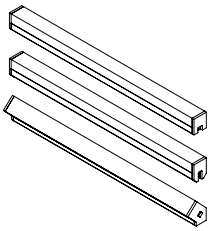

CHROMAPATH® SLIM Recessed Channels

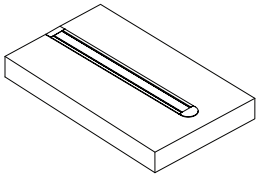

1. Epistar 3528 SMD Chip binning ranges: (2400K 90+ CRI: 2300-2425K), (2700K 90+ CRI: 2580-2725K), (2850K 90+ CRI: 2725-2870K), (3000K 90+ CRI: 2870-3045K), (3300K 90+ CRI: 3220-3465K), (3500K 90+ CRI: 3465-3710K), (3800K 90+ CRI: 3710-3985K), (4200K 90+ CRI: 3985-4260K), (4400K 90+ CRI: 4260-4503K), (5000K 90+ CRI: 4745-5028K), (6300K 90+ CRI: 6020-6530K).
2. LED chips have a luminous flux range with a tolerance of +/- 5%.
3. Actual efficacy value is dependent to specified LED driver (power supply). An estimated efficacy value can be calculated as follows: Lumen value divided by average power consumption per foot.
4. Ideal tape application temperature range is 70°F to 100°F (21°C to38°C). Initial tape application to surfaces at temperatures below 50°F (10°C) is not recommended because the adhesive becomes too firm to adhere readily. However, once properly applied, low temperature holding is generally satisfactory.
5. Each maximum run requires a dedicated power feed from the driver. Do not extend beyond the recommended maximum run length.
6. Wire leads and accessories are not rated for in-wall installation unless otherwise noted. Attached wire leads and connections are field-cuttable.
7. Do not install product in an environment outside the listed ambient temperature. Exceeding the maximum ambient temperature may damage LED chips, reduce the total lamp life, lumen output, and/or adversely impact color consistency.
8. Operating temperature is measured according to the minimum and maximum ambient temperature environment.
9. Do not install in environment where LED chips are exposed to direct sunlight as damage to the phosphor will occur.

MECHANICAL DIAGRAM

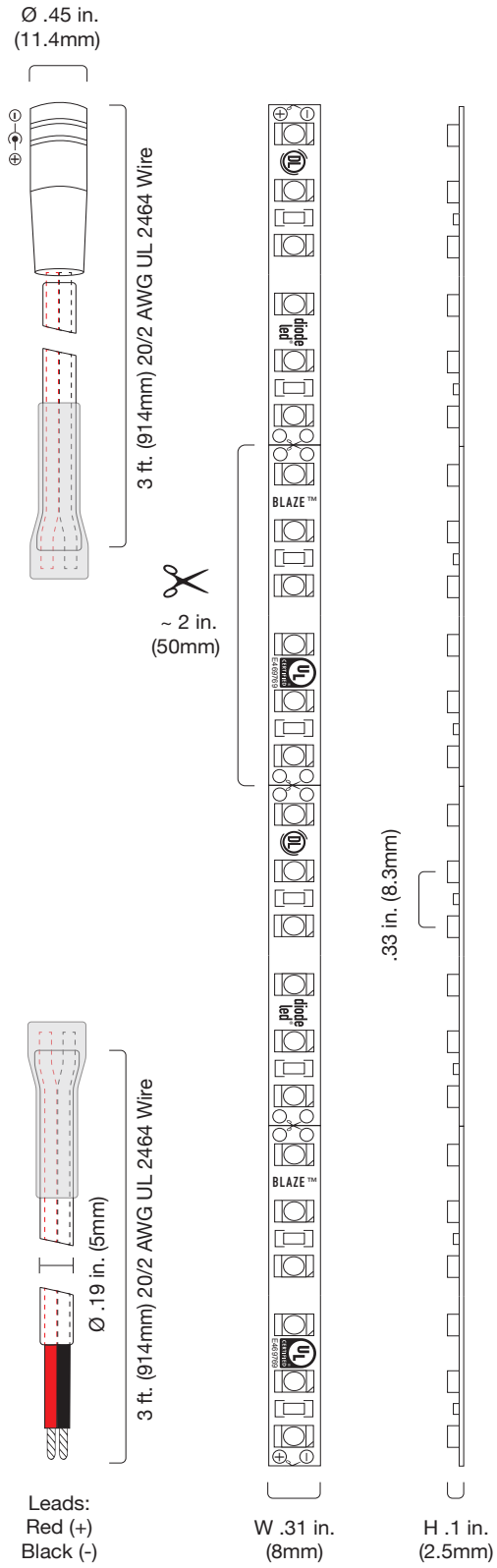

ADDITIONAL INFORMATION

- LOW VOLTAGE LED TAPE LIGHT Installation Guide

SAFETY / WARNINGS / DISCLOSURES

1. Install in accordance with national and local electrical code regulations.
2. This product is intended to be installed and serviced by a qualified, licensed electrician.
3. Only install with a Class 2 DC Constant Voltage LED driver. This product has not been evaluated for use when connected to an LED driver that does not comply with Class 2 voltage and energy limited supplies.
4. Only use copper wiring. Use wires rated for at least 176°F (80°C) and certified for use with external connection of electrical equipment.
5. Each maximum run requires a dedicated power feed from the driver. Do not extend beyond the recommended maximum run length.
6. Tape light, attached wire leads, and additional extension cables, connectors, etc., are not rated for in-wall installation unless otherwise noted. Tape light and attached wire leads are field-cuttable.
7. Ensure applicable wire is installed between driver, fixture, and any controls in-between. When choosing wire, factor in voltage drop, amperage rating, and type (in-wall rated, wet location rated, etc.). Inadequate wire installation could overheat wires, and cause fire.
8. Do not install in environment where LED chips are exposed to direct sunlight as damage to the phosphor will occur.
9. Do not install in environment where excessive heat may exist (ex. close proximity to fireplace, etc.) See Ambient Temperature ratings
10. Do not install indoor LED tape light products in outdoor / wet location environments. Only wet location tape light models are rated for outdoor / wet locations.
11. Do not modify product beyond instructions or warranty will be void.
12. Tape light must be handled with care. Excessive handling, bending, and pressure may damage the product, voiding the warranty.
13. Actual color may vary from what is pictured on this sheet and other print materials due to the limitations of photographic processes.
14. We reserve the right to modify and improve the design of our fixtures without prior notice. We cannot guarantee to match existing installed fixtures for subsequent orders or replacements in regards to product appearance, CCT, or lumen output.

WARRANTY

Limited Warranty

This product has a five (5) year limited warranty from the date of shipment. This warranty does not include the additional accessories referenced in this specification sheet. Complete warranty details for fixtures and additional accessories are available at www.diodeled.com/limited-warranty/ within the Policies section. For warranty related questions please contact product support.

Consumer's Acknowledgment

Elemental LED, Inc. stands behind its products when they are used properly and according to our specifications. By purchasing our products, the purchaser agrees and acknowledges that lighting design, configuration and installation is a complex process, wherein seemingly minor factors or changes in layout and infield adjustments can have a significant impact on an entire system. Choosing the correct components is essential. Elemental LED is able to work with the original purchaser to make an appropriate product selection to the extent of the limited information that the customer can provide, but it is virtually impossible for Elemental LED to design a system that foresees every unknown factor. For this reason, this Warranty does not cover problems caused by improper design, configuration or installation issues. Any statement from a Elemental LED employee or agent regarding a customer's bill of goods and/or purchase order is NOT an acknowledgment that the products purchased are designed and configured correctly. The purchase agrees and acknowledges that it is the customer's responsibility to adhere strictly to all information contained in the Product Specification Sheets.

There is often more than one way to design, configure and layout an LED lighting application properly to achieve the same lighting effect. Elemental LED strongly recommends that licensed professionals be used in the design and installation of lighting systems that include Elemental LED products. The specifications include important information that a designer and installer should carefully review and strictly follow. Qualified designers and certified and/or licensed installers, with access to the final installation environment, customer goals, and Elemental LED product specifications can make the requisite decisions appropriate for a successful finished lighting application.

diode led®
a division of elemental LED

© 2016 Elemental LED Inc. All rights reserved.
Specifications are subject to change without notice.
Toll Free: 877.817.6028 | Fax: 415.592.1596 | www.DiodeLED.com | info@DiodeLED.com

G5 | SPECIFICATION GUIDE

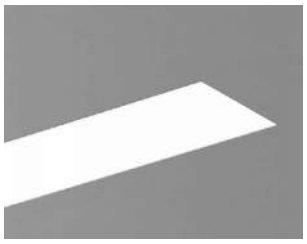

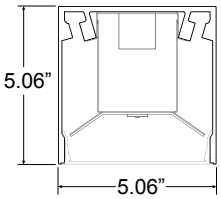

ORDERING CODE

G5

PROJECT INFO)ATE

TYPE QUANTITY

PERFORMANCE AT 4000K

		NOMINAL LUMEN OUTPUT		INPUT WATTS	EFFICACY
OUTPUT	LENS	DUAL	LED		
High	HE Tech	1720 lm/ft		19 W/ft	76 lm/W
	HE Tech		861 lm/ft	9.5 W/ft	91 lm/W
	WISP		725.25 lm/ft	9.5 W/ft	76 lm/W
Standard	HE Tech	860 lm/ft		4.75 W/ft	76 lm/W
	HE Tech		432.25 lm/ft	4.75 W/ft	91 lm/W
	WISP		364 lm/ft	4.75 W/ft	77 lm/W

Custom tuned output available from 25% to 125% of high output. Please consult factory for custom lumen output and wattage.

LIGHT LOSS FACTORS

	OUTPUT	LED CCT	CRI
BASELINE	LH	4000K	80+ CRI
	LS - 50%	3500K - 97%	90+ CRI - 80%
		3000K - 93%	

MOUNTING OPTIONS

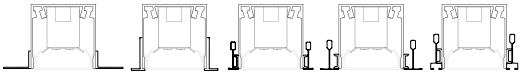

(G) | Flush Gyp / Hard Lid (XP) | Trim Flange (T) | T-Bar 9/16 (X) | T-Bar 15/16 (N) | T-Bar 9/16 Slot

G5

SERIES	LENGTH OR PATTERN TYPE	OUTPUT	LED CCT	VOLTAGE	DIRECT OPTICS
G5	**_** Nominal Length* **M_** Exact Length**	**LS** LED Standard Output **LH** LED High Output **DS** Dual LED Standard Output* **DH** Dual LED High Output* **C_** LED Custom Output**	**30** 3000K **35** 3500K **40** 4000K	**U** Universal 120V - 277V **3** 347V	**HE** HE Tech™ **KS** Awash Kicker + WISP
	PL_ “L” Shape Flat*** **PLCW_** “L” Wall to Ceiling*** **PLWW_** “L” Wall to Adjacent Wall*** **PU_** “U” Shape Flat*** **PUCW_** “U” Wall to Ceiling to Wall*** **PUWW_** “U” Wall to Wall to Wall*** **PR_** Rectangle / Square***				
	*Specify in feet to the nearest foot (i.e. N12) **Specify in inches to then nearest 1/8 (i.e. M180.125) ***Specify in inches to the nearest 1/8 (See Pattern Guide for details)	*Not available with Awash Kicker + WISP optic **Available from 25% to 125% of LED High Output			

MOUNTING	FINISH*	DIMMING	EMERGENCY	SENSORS
RG 1” Regressed Gyp / Mud Over Flange **XP** 1/2” Trim Flange **T** T-Bar 9/16” **X** T-Bar 15/16” **N** T-Bar 9/16 Slot **T6** 6” On Center Standard T-Bar 9/16”* **N6** 6” On Center Slot T-Bar 9/16”*	**W** Satin White **B** Satin Black **O_** Other** Selected by architect.	**D1** Lutron Eco H series (LDE1) **D3** Other Dimming**	**E_** Emergency - battery*	**P** Photocell / Daylight Sensor** **OP** Occupancy & Daylight Sensor
*Ceiling systems USG Logix™, 6” Armstrong Techzone™ or similar. Housing slightly regressed on N6.	*RG, XP, T6, N4 mounting types only **Specify RAL#	*Dimming to 1% stated for standard 0-10v dimming **Specify model/series	*(1) ILB-SL-CP12 (1200lm for 90min). Specify desired quantity of batteries. Not available on fixtures < 4” length. Not available for 347V.	*Wattstopper FS-205 (Ø1”) **Wattstopper FD-301 wired for daylight harvesting. Requires 0-10v dimming.

OPTIONS	
MRL_	MR16 LED*
N	New York City Code
K	Natatorium Application
Q	Wet Location***
CRI	90+ CRI
CP	Chicago Plenum
MRI	MRI

*Enter quantity. Submit MR16 addendum
**Submit multi-circuiting requirements
***Wet location, see guide and contact Design Assist

LITHONIA LIGHTING®

Catalog Number	
Notes	
Type	

PRECISE® COLLECTION

Edge-Lit Exits

LRP

LED LAMPS

NEMA Premium LED

FEATURES & SPECIFICATIONS

INTENDED USE — Suitable for architectural applications where aesthetics and superior performance are required.

CONSTRUCTION — High-polish, injection-molded virgin acrylic panel, ultrasonically welded to eliminate visible hardware. Graduated depth of molded letters provides uniform light distribution on graphics. Standard housing finish is brushed aluminum.

Precision-molded, textured letters – 6" high with 3/4" stroke, with 100 ft viewing distance rating, based upon UL924 standard. Chevron indicator direction must be specified.

Recessed rough-in section constructed of 20-gauge, die-formed galvanized steel. Extruded aluminum housing trim mounts flush onto wall or ceiling.

Mounting canopy for top mount is constructed of extruded aluminum housing to match housing finish.

ELECTRICAL — Sealed, maintenance-free nickel cadmium battery delivers 90 minutes capacity to lamp. Constant-current series charger, 24-hour recharge after 90-minute discharge.

Polarized battery connector simplifies installation and maintenance; prevents charger damage due to improper connection.

OPTICS — LEDs mounted on printed circuit board. The typical life of the exit LED lamp is 10 years.

Low energy consumption – EL N operation: only 2.3W for 120V single-face red sign; 1.7W for 120V single-face green sign. Non-emergency operation: only 1.5W for 120V single-face red sign; 1.2W for 120V single-face green sign.

INSTALLATION — Recessed mount – rough-in section for back, ceiling or end mounting. Fits into minimum wall or ceiling opening 13-5/8" L x 4-1/2" W x 3-1/8" D.

Adjustable T-bar hangers adapt mounting tray for mounting in suspended ceilings or variable-size framed openings. Trim ring has 3/4" variable depth adjustment to ensure flush fit against surface of wall or ceiling.

Plug-in wire connections and self-captive mounting screws for mounting panel/trim to rough-in section.

Top Mount (TM) - low-profile mounting canopy attaches exit to J-box. No rough-in section required.

LISTINGS — UL listed. Non-IC recessed mounting. Meets UL 924, NFPA 101 (current Life Safety Code), NEC and OSHA illumination standards, and State of Minnesota requirements for less than 20W energy consumption. Listed and labeled to comply with Canadian Standards C-860 and C-22.2 No.9 (see options). NEMA Premium certified.

WARRANTY — 5-year limited warranty, including lamps. Complete warranty terms located at: www.acuitybrands.com/CustomerResources/Terms_and_conditions.aspx

NOTE: Actual performance may differ as a result of end-user environment and application. All values are design or typical values, measured under laboratory conditions at 25°C. Specifications subject to change without notice.

ORDERING INFORMATION For shortest lead times, configure products using **bolded options.**

Example: LRP 1 RMR LA 120/277 EL N

LRP											
Family		**Housing color**		**Number of faces**		**Letters/background**		**Directional indicators**[2]		**Input voltage**	
LRP	LED	**(blank)**	Brushed aluminum	**1**	Single face	RW	Red on white	**(blank)**	None	**120/277**	Dual voltage
		W	White	**2**	Double face	**RC**	Red on clear (single face only)[1]	**LA**	Left[3]	**120/347**	Dual voltage[5]
		B	Black	As needed		**RMR**	Red on mirror (simulates clear background for double-face exits)[1,2]	**RA**	Right[3]		
		BZ	Bronze				As needed	**LRA**	Left and right		
		BS	Polished Brass[1]			GW	Green on white[1]	**DA**	Double face[4]		
		U	Unfinished			**GC**	Green on clear (single face only)[1]	As needed			
		Selected by Architect				**GMR**	Green on mirror (simulates clear background for double-face exits)[1,2]				

Emergency operation		Mounting		Item type		Options[8]	
(blank)	AC only	**(blank)**	Ceiling or back mount	**(blank)**	Complete exit panel and rough-in section[8]	FI	Fire alarm interface[9,10]
EL N	Nickel cadmium battery	EM	Recessed end mount	**PNL**	Panel assembly only	F	Flashing emergency operation (one flash/second)[9,11]
X2	Lamp boards wired on two separate circuits (specify 120V or 277V)[6,10]	TM	Top mount[7]			FA	Flashing emergency operation and intermittent audible alarm
		As needed				CSA	Listed and labeled to comply with Canadian standards[11]

Accessories[8,12]**:** *Order as separate items.*

ELA R LRIS 120/277 EL N	Single-face, red LED emergency rough-in section
ELA G LRIS 120/277 EL N	Single-face, green LED emergency rough-in section
ELA R 2LRIS 120/277 EL N	Double-face, red LED emergency rough-in section
ELA G 2LRIS 120/277 EL N	Double-face, green LED emergency rough-in section
ELA LCRIS	LED rough-in section (supplied standard with recessed exit unless PNL suffix is specified; order ELA LCRIS only if needed for early installation). Available AC only with no options.[9]
ELA US12	12" pendant-mount kit (Top mount exits only). Mounting canopy is brushed aluminum. To order white or black canopy, add W or B to catalog number. Example: ELA W US12. To order 24" or 36" lengths, add 24 or 36 to catalog number. Example: ELA US24. See spec sheet ELA-StemKits.
ELA LRIS 277 X2	LED rough-in section (supplied standard with recessed exit unless PNL suffix is specified; order ELA LRIS 277 X2 only if needed for early installation).
ELA LRIS 120 X2	LED rough-in section (supplied standard with recessed exit unless PNL suffix is specified; order ELA LRIS 120 X2 only if needed for early installation).

Notes

1 Not available with EM option, consult factory for assistance.
2 See chart on back for more information.
3 Only available with single face.
4 Only available with double face.
5 Only available with CSA option.
6 Not available with top mount exits (TM).
7 No Rough-In section required. Attaches directly to J-box. Only available with AC operation.
8 When ordering recessed rough-in separately, all options must be included with rough-in nomenclature. Example: ELA LRIS 277 X2 F.
9 Choice of F or FI, not available with both. Not available with top mount exits.
10 Not available with CSA option.
11 Only available with non-emergency. Only available with RW letter color.
12 Rough-in supplied standard with exit unless PNL suffix is specified. Order separately only if needed for early installation.

LRP Precise® LED Exit Signs

SPECIFICATIONS

ELECTRICAL EMERGENCY

Primary Circuit

Type	Typical LED life[1]	Supply voltage	Number of faces	Input watts	Max. amps
Red	10 years	120	1	2.3	.093
		277	1	2.7	.095
Red	10 years	120	2	3.2	.084
		277	2	3.9	.094
Green	10 years	120	1	1.7	.07
		277	1	1.9	.07
Green	10 years	120	2	3.7	.14
		277	2	3.8	.14

ELECTRICAL AC ONLY

Primary Circuit

Type	Typical LED life[1]	Supply voltage	Number of faces	Input watts	Max. amps
Red	10 years	120	1	1.5	.087
		277	1	1.8	.089
		347	1	2.2	.107
Red	10 years	120	2	3.1	.178
		277	2	3.4	.180
		347	2	4.1	.220
Green	10 years	120	1	1.2	.064
		277	1	1.3	.062
Green	10 years	120	2	2.0	.06
		277	2	2.3	.06

BATTERY

Sealed Nickel-Cadmium

Shelf life [2]	Typical life [2]	Maintenance[3]	Optimum temperature[4]
3 yrs.	7–9 yrs.	none	32°–100°F (0°-38°C)

Notes

1 Based on continuous operation. The typical life of the exit LED lamp is 10 years.

2 At 77°F (25°C).

3 All life safety equipment, including emergency lighting for path of egress must be maintained, serviced, and tested in accordance with all National Fire Protection Association (NFPA) and local codes. Failure to perform the required maintenance, service, or testing could jeopardize the safety of occupants and will void all warranties.

4 Optimum ambient temperature range where unit will provide capacity for 90 minutes. Higher and lower temperatures affect life and capacity.

MOUNTING

All dimensions are in inches (centimeters).

Shipping weight for panel: 5 lbs. (2.3 kgs.)

Shipping weight for rough-in section: 5.8 lbs. (2.6 kgs.)

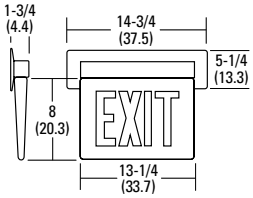

Back Mount (recessed)

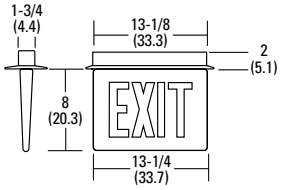

Ceiling Mount (recessed)

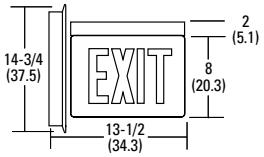

End Mount (recessed)

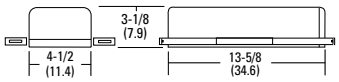

Rough -In Section

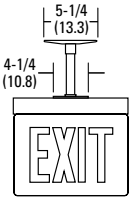

With Pendant Mounting kit (TM mounting only)

Directional Indicators

Specification (add to catalog number)	Graphics Back	Graphics Front
LA		
RA		
LRA (single face)		
DA		
LRA (double face)		

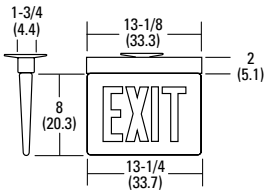

Top Mount (AC only operation)

KEY FEATURES

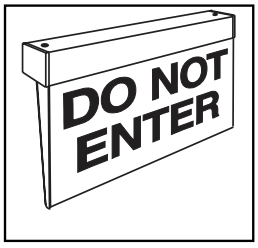

Silk-screening process allows customized text and/or graphics.

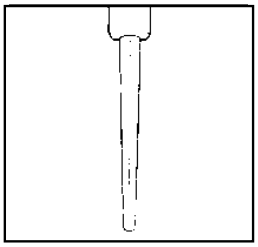

Unique wedge-shaped panel design concentrates light for uniform letter illumination.

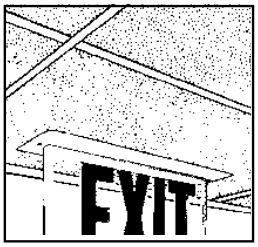

Trim fits flush against wall or ceiling for clean, attractive appearance.

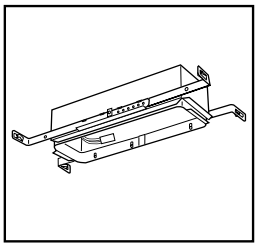

Small rough-in section.

© 1994-2017 Acuity Brands Lighting, Inc. All rights reserved. Rev. 08/02/17